REF Schematic for RK3568/RK3568B2/RK3568J

Main Functions Introduction

1) PMIC: RK809-5+DiscretePower
2) RAM: DDR4 2x16Bit----------Default
   Option:LPDDR4/4x 1X32bit(200ball)
   Option:DDR3 4x16bit
   Option:DDR3 4x16bit+2x16bit ECC
   Option:DDR4 2x16bit+1x16bit ECC
   Option:LPDDR3 1x32bit(178ball)
   Option:DDR4 4x16bit
3) ROM: eMMC----------Default
   Option:Nand Flash
   Option:SPI Flash
4) Support:1 x Micro SD Card3.0
5) Support:1 x USB3.0 OTG0 + 1 x USB3.0 HOST1 + 1 x SATA3.0 Port2 ----------Default
   Option:1 x USB3.0 OTG0 + 1 x USB3.0 HOST1 + 1 x 1Lane PCIe2.0(RC Mode)
   Option:1 x USB3.0 OTG0 + 1 x USB2.0 HOST1 + 1 x SATA3.0 Port1 + 1 x SATA3.0 Port2
   Option:1 x USB3.0 OTG0 + 1 x USB2.0 HOST1 + 1 x SATA3.0 Port1 + 1 x 1Lane PCIe2.0(RC Mode)
   Option:1 x USB2.0 OTG0 + 1 x SATA3.0 Port0 + 1 x USB3.0 HOST1 + 1 x SATA3.0 Port2
   Option:1 x USB2.0 OTG0 + 1 x SATA3.0 Port0 + 1 x USB3.0 HOST1 + 1 x 1Lane PCIe2.0(RC Mode)
   Option:1 x USB2.0 OTG0 + 1 x SATA3.0 Port0 + 1 x USB2.0 HOST1 + 1 x SATA3.0 Port1 + 1 x SATA3.0 Port2
   Option:1 x USB2.0 OTG0 + 1 x SATA3.0 Port0 + 1 x USB2.0 HOST1 + 1 x SATA3.0 Port1 + 1 x 1Lane PCIe2.0(RC Mode)
6) Support:1 x USB2.0 HOST2+ 1 x USB2.0 HOST3 -- ------Default
7) Support:4G module Via MiniPCIe2.0 Slot With PCIE2.0 and USB2.0 HOST3 function ------Option
8) Support:2 x 1Lane PCIe3.0 Connector (RC Mode) ------Default
   Option:1 x 2Lanes PCIe3.0 Connector (RC Mode)
9) Support:1 x HDMI2.0 TX
10) Support:1 x LCM MIPI DSI TX0 ----------Default
   Option:1 x LCM MIPI DSI TX1
   Option:1 x LCM LVDS TX0/LVDS TX1
   Option:1 x LCM Dual LVDS TX
   Option:1 x LCM Dual MIPI DSI TX
   Option:1 x LCM eDP TX
11) Support:1 x VGA OUT ----------Default
12) Support:1 x 4Lanes Camera MIPI CSI RX ----------Default
   Option:2 x 2Lanes Camera MIPI CSI RX
   Option:1 x HDMI1.4 RX(HDMI to MIPI CSI)
13) Support:a/b/g/n/ac 2X2 SDIO WIFI5+BT5.0+PCM --------Default
   Option:a/b/g/n/ac 1X1 SDIO WIFI+BT+PCM
   Option:a/b/g/n/ac/ax 2X2 PCIe WIFI6+BT5.0+PCM
14) Support:1 x 10/100/1000M Ethernet(RGMII1_M1) -------Default
   Option:1 x 10/100/1000M Ethernet(RGMII0) or 1 x 10/100M Ethernet(RMII0)
   Option:1 x 10/100/1000M PCIe Ethernet Card or 2 x 10/100/1000 Ethernet(QSGMII) or 1 x 10/100/1000 Ethernet(SGMII)
15) Support:1 x Headphone output ----------Default
16) Support:1 x ECM MIC + 1 x Speaker out ----------Default
   Option:4 x MEMS MIC + 1 x Speaker out + Loopback or 2 x MEMS MIC + 1 x Speaker out + Loopback
   Option:4 x MEMS MIC + 2 x Speaker out + Loopback
17) Support:1 x IR Receiver ----------Default
18) Support:Array Key(MENU,VOL+,VOL-,ESC),Reset,Power on/off Key
19) Support:3 x UART + 1 x RS485 + 1 x CAN(Option)
20) Support:Debug UART and ARM JTAG

Note:
When using RK3568J, external devices need to be replaced with industrial devices

Rockchip Confidential

Rockchip 瑞芯微电子	Rockchip Electronics Co., Ltd				
Project:	RK3568_AIoT_REF_SCH				
File:	00.Cover Page				
Date:	Tuesday, September 26, 2023			Rev:	V2.0
Designed by:	Zhangdz	Reviewed by:	Default	Sheet:	1 of 72

Table of Content

Page 1	00.Cover Page	Default
Page 2	01.Index and Notes	Default
Page 3	02.Revision History	Default
Page 4	03.Block Diagram	Default
Page 5	04.Power Diagram	Default
Page 6	05.Power Sequence	Default
Page 7	06.IO Power Domain Map	Default
Page 8	07.UART Map/GMAC0/1 Path Map	Default
Page 9	08.I2C Bus Map	Default
Page 10	09.PCIE30/MULTI_PHY/VOP Fun Map	Default
Page 11	10.RK3568_Power/GND	Default
Page 12	11.RK3568_DDR PHY	Default
Page 13	12.RK3568_OSC/PLL/PMUIO	Default
Page 14	13.RK3568_Flash/SD Controller	Default
Page 15	14.RK3568_USB/PCIe/SATA PHY	Default
Page 16	15.RK3568_SARADC/GPIO	Default
Page 17	16.RK3568_VI Interface	Default
Page 18	17.RK3568_VO Interface_1	Default
Page 19	18.RK3568_VO Interface_2	Default
Page 20	19.RK3568_Audio Interface	Default
Page 21	20.Power_DC IN	Default
Page 22	21.Power_PMIC	Default
Page 23	22.Power_Ext Discrete/RTC IC	Default
Page 24	23.Power_Flash Power Manage	Default
Page 25	25.USB2/USB3 Port	Default
Page 26	31.DRAM-DDR3_4X16Bit_96P	Option
Page 27	32.DRAM-DDR3_4X16+ECC_2X16_96P	Option
Page 28	33.DRAM-DDR4_2x16bit_96P	Default
Page 29	34.DRAM-DDR4_4x16Bit_96P	Option
Page 30	35.DRAM-DDR4_96P_2X16+ECC_1X16	Option
Page 31	36.DRAM-LPDDR3_1X32bit_178P	Option
Page 32	38.DRAM-LPDDR4X_1X32bit_200P	Option
Page 33	40.Flash-eMMC Flash	Default
Page 34	41.Flash-Nand Flash	Option
Page 35	42.Flash-MicroSD Card	Default
Page 36	43.Flash-SPI Flash	Option
Page 37	45.VI-Camera_Power	Default
Page 38	47.VI-Camera_MIPI_CSI_1x 4Lanes	Default
Page 39	48.VI-Camera_MIPI_CSI_2x 2Lanes	Option
Page 40	49.VI-HDMI1.4 RX(To MIPICSI RX)	Option
Page 41	50.VO-HDMI2.0 TX	Default
Page 42	52.VO-LCM_MIPI_DSI_TX0/TX1	Default
Page 43	53.VO-LCM_Dual MIPI_DSI TX	Option
Page 44	54.VO-LCM_LVDS TX0/TX1	Option
Page 45	55.VO-LCM_Dual LVDS TX	Option
Page 46	56.VO-LCM_eDP TX	Option
Page 47	58.TP Connector_COF	Default
Page 48	59.VO-VGA Output	Default
Page 49	60.WIFI/BT-SDMMC1_1T1R + UART	Option
Page 50	62.WIFI/BT-SDMMC1_2T2R + UART	Default
Page 51	64.WIFI6/BT-PCIe_2T2R + UART	Option
Page 52	65.Ethernet-FEPHY_RMII0	Option
Page 53	67.Ethernet-GEPHY_RGMII0	Option
Page 54	68.Ethernet-GEPHY_RGMII1_M1	Default
Page 55	69.Ethernet-PCIE Ethernet	Option
Page 56	70.Audio-Headphone Port	Default
Page 57	71.Audio-SingleMic+RK809_SPK	Default
Page 58	72.Audio-MicArray+RK809_SPK	Option
Page 59	74.Audio-MicArray+EXT Dual_SPK	Option
Page 60	82.SATA-SATA3.0 Slot_7P	Default
Page 61	83.PCIE-PCIE2.0_1x1Lane_RC_36P	Option
Page 62	84.PCIE-PCIE3.0_1x2Lanes_RC_64P	Option
Page 63	85.PCIE-PCIE3.0_2x1Lane_RC_32P	Default
Page 64	87.MiniPCIe2.0 Slot_With 4G Fun	Option
Page 65	88.Ethernet-GEPHY_SGMII	Option
Page 66	89.Ethernet-GEPHY_QSGMII	Option
Page 67	90.IR Receiver	Default
Page 68	91.Debug UART	Default
Page 69	92.KEY Array/SARADC	Default
Page 70	93.LED/HW_ID/BOM_ID	Default
Page 71	95.UART/RS485/CAN Port	Default
Page 72	99.Mark/Hole/Heatsink	Default
Page 73		
Page 74		
Page 75		
Page 76		

Description

Note

Option

Generate Bill of Materials

Header:

Item\tPart\tDescription\tPCB Footprint\tReference\tQuantity\tOption

Combined property string:

{Item}\t{Value}\t{Description}\t{PCB Footprint}\t{Reference}\t{Quantity}\t{Option}

Notes

NOTE 1:
Component parameter description
1. DNP stands for component not mounted temporarily
2. If Value or option is DNP, which means the area is reserved without being mounted

NOTE 2:
Please use our recommended components to avoid too many changes.
For more informations about the second source,please refer to our AVL.

Rockchip Confidential

Revision History

Version	Date	By	Change Dsecription	Approved
V1.0	2021-02-04	Zhangdz	1:Revision preliminary version	
V1.1	2021-06-11	Zhangdz	1:Change content Please Refer to: RK3568_AIoT_REF_SCH_V11_20210611_Modify_Notes	
V2.0	2023-09-27	Zhangdz	1:Change content Please Refer to: RK3568_AIoT_REF_SCH_V20_20230927_Modify_Notes	

Rockchip Confidential

RK3568 Ref Block Diagram(Typical Application Case)

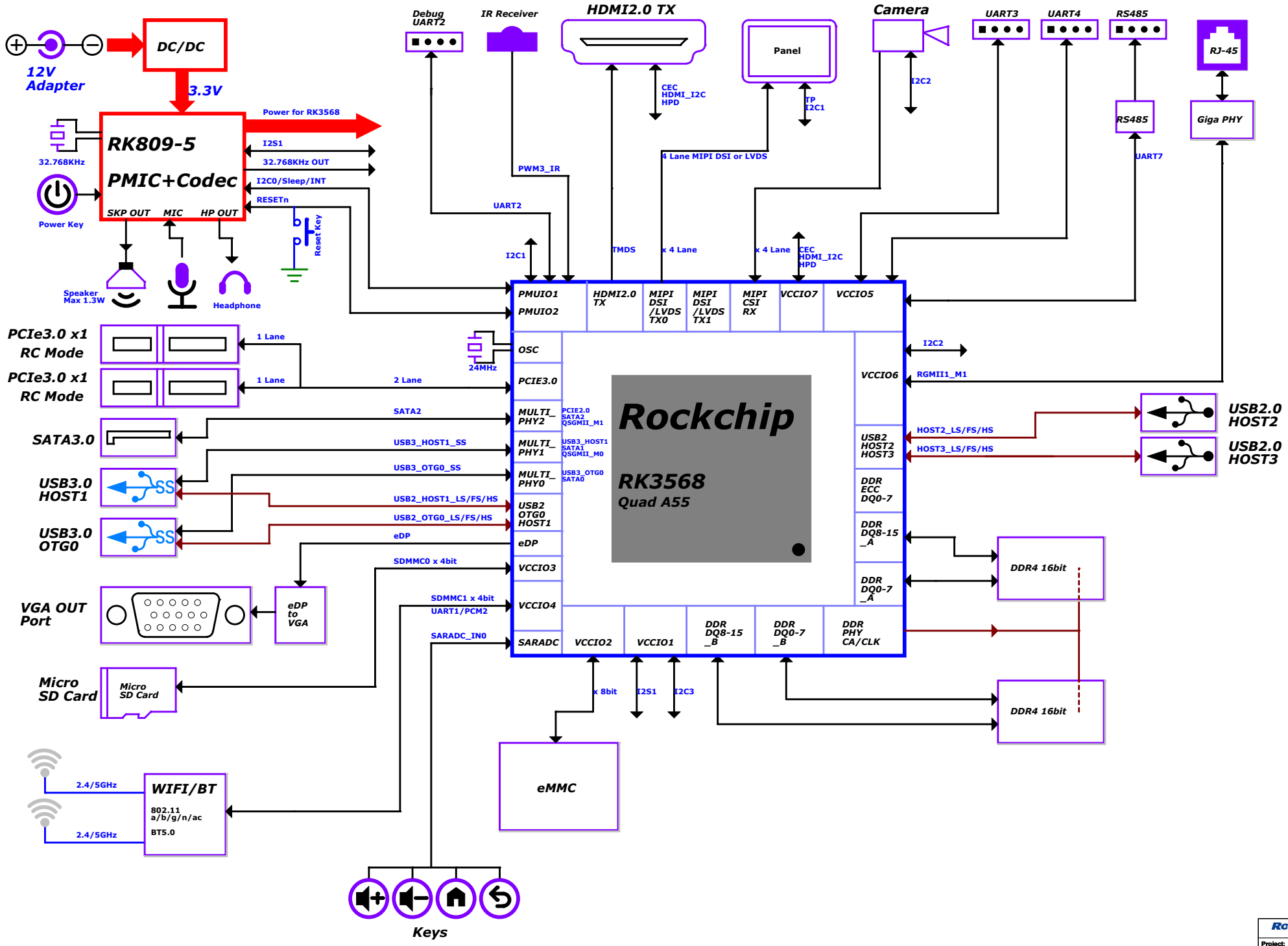

Rockchip Confidential

Rockchip 瑞芯微电子	Rockchip Electronics Co., Ltd		
Project:	RK3568_AIoT_REF_SCH		
File:	03.Block Diagram		
Date:	Tuesday, September 26, 2023	Rev:	V2.0
Designed by: Zhangtz	Reviewed by: Default	Sheet:	4 of 72

Default Power Diagram

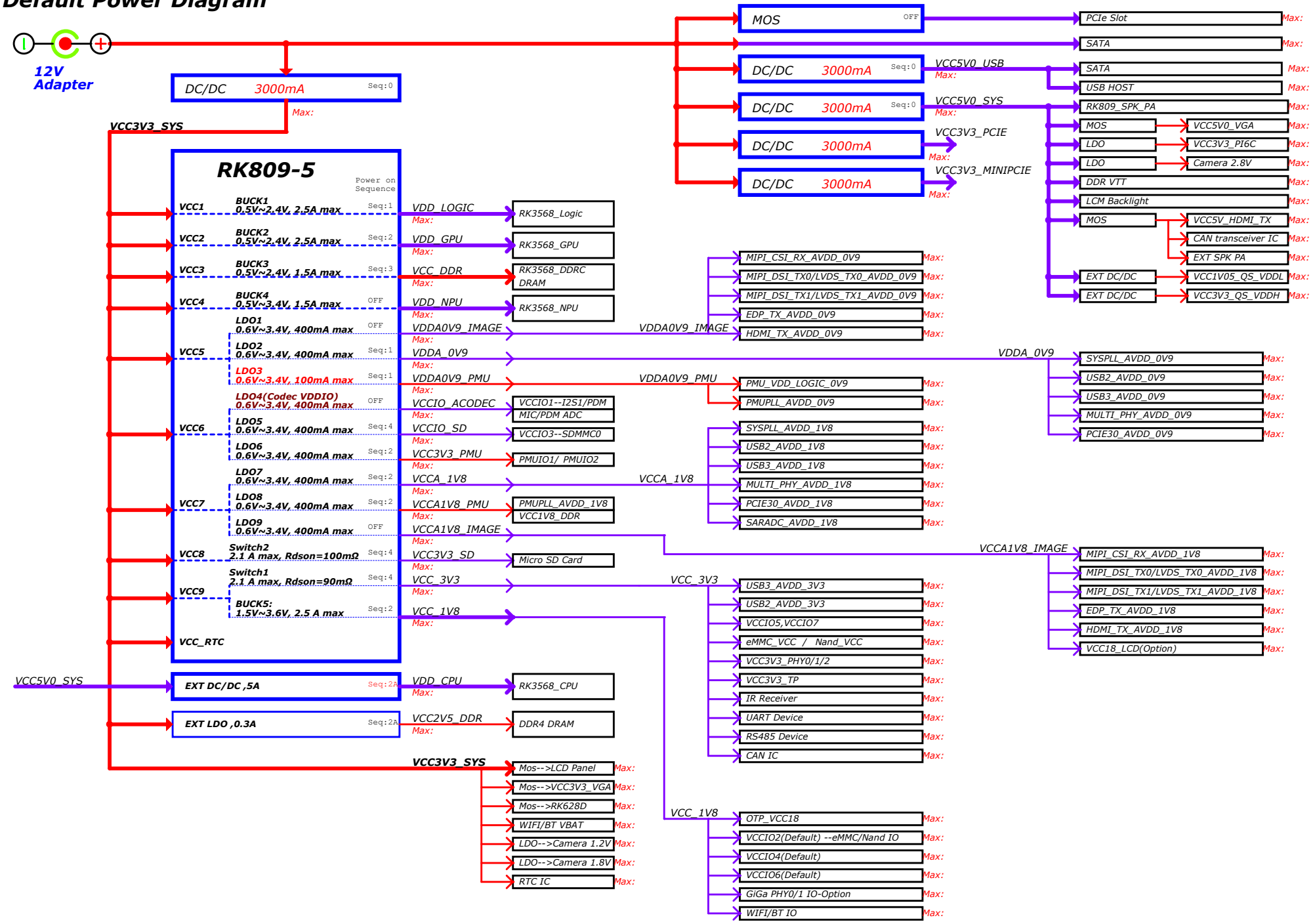

Rockchip Confidential

Rockchip 瑞芯微电子	Rockchip Electronics Co., Ltd		
Project:	RK3568_AIoT_REF_SCH		
File:	04.Power Diagram		
Date:	Tuesday, September 26, 2023	Rev:	V2.0
Designed by: Zhangtz	Reviewed by: Default	Sheet:	5 of 72

Power Sequence

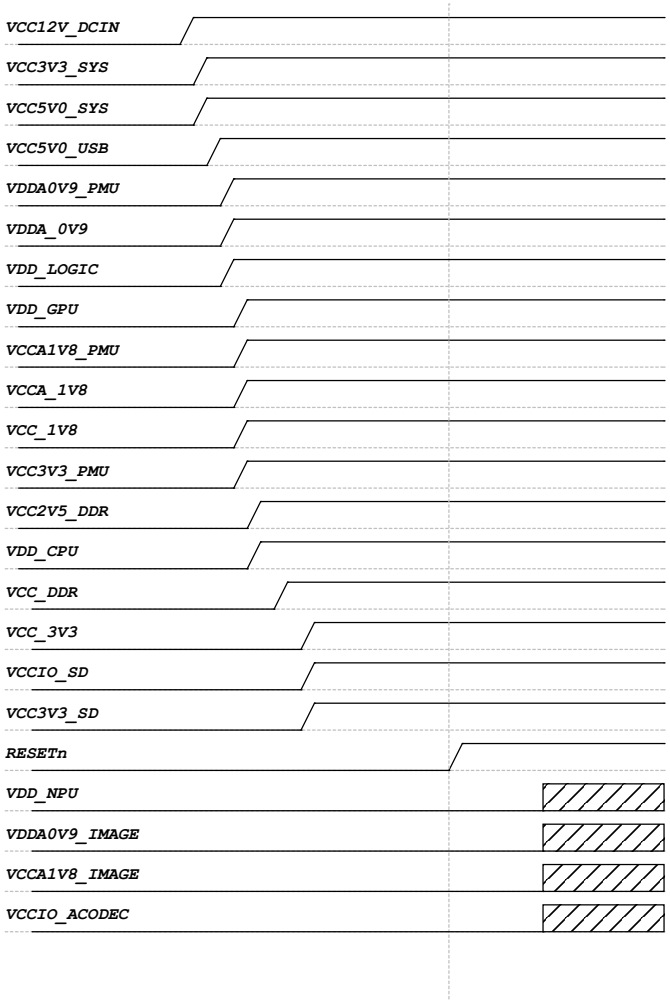

Power description

Power Supply	PMIC Channel	Supply Limit	Power Name	Time Slot	Default Voltage	Default ON/OFF	Work Voltage	Peak Current	Sleep Current
VCC3V3_SYS	RK809_BUCK1	2.5A	VDD_LOGIC	Slot:1	0.9V	ON	0.9V	TBD	TBD
VCC3V3_SYS	RK809_BUCK2	2.5A	VDD_GPU	Slot:2	0.9V	ON	DVFS	TBD	TBD
VCC3V3_SYS	RK809_BUCK3	1.5A	VCC_DDR	Slot:3	ADJ FB=0.8V	ON	1.2V (DDR4)	TBD	TBD
VCC3V3_SYS	RK809_BUCK4	1.5A	VDD_NPU	N/A	0V	OFF	DVFS	TBD	TBD
VCC3V3_SYS	RK809_LDO1	0.4A	VDDA0V9_IMAGE	N/A	0V	OFF	0.9V	TBD	TBD
	RK809_LDO2	0.4A	VDDA_0V9	Slot:1	0.9V	ON	0.9V	TBD	TBD
	RK809_LDO3	0.1A	VDDA0V9_PMU	Slot:1	0.9V	ON	0.9V	TBD	TBD
VCC3V3_SYS	RK809_LDO4	0.4A	VCCIO_ACODEC	N/A	0V	OFF	3.3V	TBD	TBD
	RK809_LDO5	0.4A	VCCIO_SD	Slot:4	3.3V	ON	3.3V or 1.8V (SD2.0=3.3V,SD3.0=1.8V)	TBD	TBD
	RK809_LDO6	0.4A	VCC3V3_PMU	Slot:2	3.3V	ON	3.3V	TBD	TBD
VCC3V3_SYS	RK809_LDO7	0.4A	VCCA_1V8	Slot:2	1.8V	ON	1.8V	TBD	TBD
	RK809_LDO8	0.4A	VCCA1V8_PMU	Slot:2	1.8V	ON	1.8V	TBD	TBD
	RK809_LDO9	0.4A	VCCA1V8_IMAGE	N/A	0V	OFF	1.8V	TBD	TBD
VCC3V3_SYS	RK809_SW2 100mohm	2.1A	VCC3V3_SD	Slot:4	3.3V	ON	3.3V	TBD	TBD
VCC3V3_SYS	RK809_SW1 90mohm	2.1A	VCC_3V3	Slot:4	3.3V	ON	3.3V	TBD	TBD
	RK809_BUCK5	2.5A	VCC_1V8	Slot:2	1.8V	ON	1.8V	TBD	TBD
	RK809_RESETn			Slot:4+5					
VCC12V_DCIN	EXT BUCK	3.0A	VCC3V3_SYS	Slot:0	3.3V	ON	3.3V	TBD	TBD
VCC12V_DCIN	EXT BUCK	3.0A	VCC5V0_SYS	Slot:0	5.0V	ON	5.0V	TBD	TBD
VCC5V0_SYS	EXT BUCK	6.0A	VDD_CPU	Slot:2A	1.0V	ON	DVFS	TBD	TBD
VCC3V3_SYS	EXT LDO	0.3A	VCC2V5_DDR	Slot:2A	2.5V	ON	2.5V	TBD	TBD

Rockchip Confidential

IO Power Domain Map

If IO domain power voltage is adjusted, the software DTS configuration must be updated synchronously, otherwise the IO may be damaged!

IO Domain	Pin Num	Support IO Voltage		Notes	Default IO Domain Voltage		
		3.3V	1.8V		Supply Power Net Name	Power Source	Voltage
PMUIO0 (PMUPLL_AVDD_1V8)	Pin Y21	✗	✓	PMUIO0 are fixed 1.8V level mode, which cannot be configured.	VCCA1V8_PMU	VCCA1V8_PMU	1.8V
PMUIO1	Pin Y20	✓	✗	PMUIO1 are fixed 3.3V level mode, which cannot be configured.	VCC3V3_PMU	VCC3V3_PMU	3.3V
PMUIO2	Pin W19	✓	✓	PMUIO2 supports 1.8V or 3.3V level mode Support configurable but require that their hardware power supply voltages must be consistent with the software configuration correspondingly.[2]	VCC3V3_PMU	VCC3V3_PMU	3.3V
VCCIO1	Pin H17	✓	✓	VCCIO1 supports 1.8V or 3.3V level mode Support configurable but require that their hardware power supply voltages must be consistent with the software configuration correspondingly.[2]	VCCIO_ACODEC	VCCIO_ACODEC	3.3V
VCCIO2	Pin H18	✓	✓	VCCIO2 supports 1.8V or 3.3V level mode Default is configured by hardware,namely PIN "FLASH_VOL_SEL" state determines which mode to work in.[1][2]	VCCIO_FLASH	VCC_1V8	1.8V
VCCIO3	Pin L22	✓	✓	VCCIO3 supports 1.8V or 3.3V level mode Support configurable but require that their hardware power supply voltages must be consistent with the software configuration correspondingly.[2][3]	VCCIO_SD	VCCIO_SD	3.3V
VCCIO4	Pin J21	✓	✓	VCCIO4 supports 1.8V or 3.3V level mode Support configurable but require that their hardware power supply voltages must be consistent with the software configuration correspondingly.[2]	VCCIO4	VCC_1V8	1.8V
VCCIO5	Pin V10 Pin V11	✓	✓	VCCIO5 supports 1.8V or 3.3V level mode Support configurable but require that their hardware power supply voltages must be consistent with the software configuration correspondingly.[2]	VCC_3V3	VCC_3V3	3.3V
VCCIO6	Pin R9 Pin U9	✓	✓	VCCIO6 supports 1.8V or 3.3V level mode Support configurable but require that their hardware power supply voltages must be consistent with the software configuration correspondingly.[2]	VCCIO6	VCC_1V8	1.8V
VCCIO7	Pin V12	✓	✓	VCCIO7 supports 1.8V or 3.3V level mode Support configurable but require that their hardware power supply voltages must be consistent with the software configuration correspondingly.[2]	VCC_3V3	VCC_3V3	3.3V

For example, the VCCIO4 hardware has been modified to 3.3V power supply, and the corresponding DTS must be modified to 3.3V configuration, otherwise the IO of VCCIO4 will be damaged.

If a board needs to be compatible with two voltage choices, recommended to enable BOM ID

Note:

[1]:When VCCIO2 voltage is connected to 1.8V, FLASH_VOL_SEL must be high
When VCCIO2 voltage is connected to 3.3V, FLASH_VOL_SEL must be low
If VCCIO2 power supply voltage and FLASH_VOL_SEL fails to meet the above relationship, its function will be abnormally(for example, it cannot be started normally) or IO will be damaged.

[2]:When the IO domain power supply voltage is 1.8V, the IO domain voltage configuration in DTS must be set to 1.8V mode.
If it is misconfigured to 3.3V mode, the IO function of this power domain will be abnormally;
When the IO domain power supply voltage is 3.3V, the IO domain voltage configuration in DTS must be set to 3.3V mode.
If it is misconfigured to 1.8V mode, the IO in this power domain will be in overvoltage state, and the IO will be damaged after long-term operation.

[3]:When VCCIO3 IO domain is assigned as SD card function,:
If SD3.0 mode is to be supported, VCCIO3 power supply voltage must be support configurable, 3.3V in SD2.0 mode and 1.8V in SD3.0 mode.
If only SD2.0 mode is supported (SD3.0 card only works in SD2.0 mode), VCCIO3 only needs fixed power supply of 3.3V.
When VCCIO3 IO domain is assigned as other function,:
Such as uart5 and uart6, then note [2] should be followed

Rockchip Confidential

Default UART Map

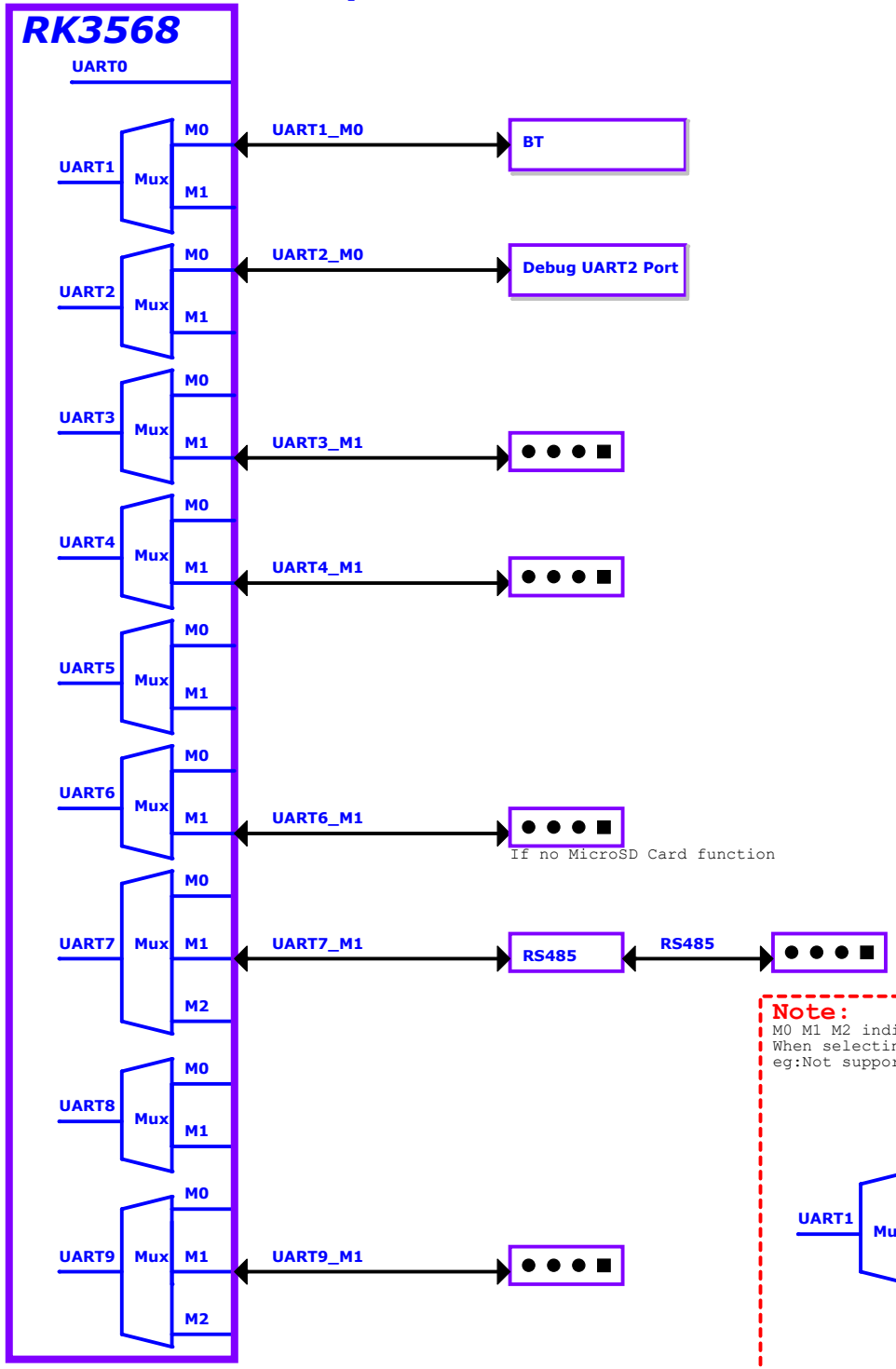

GMAC0/1 Path Map

Rockchip Confidential

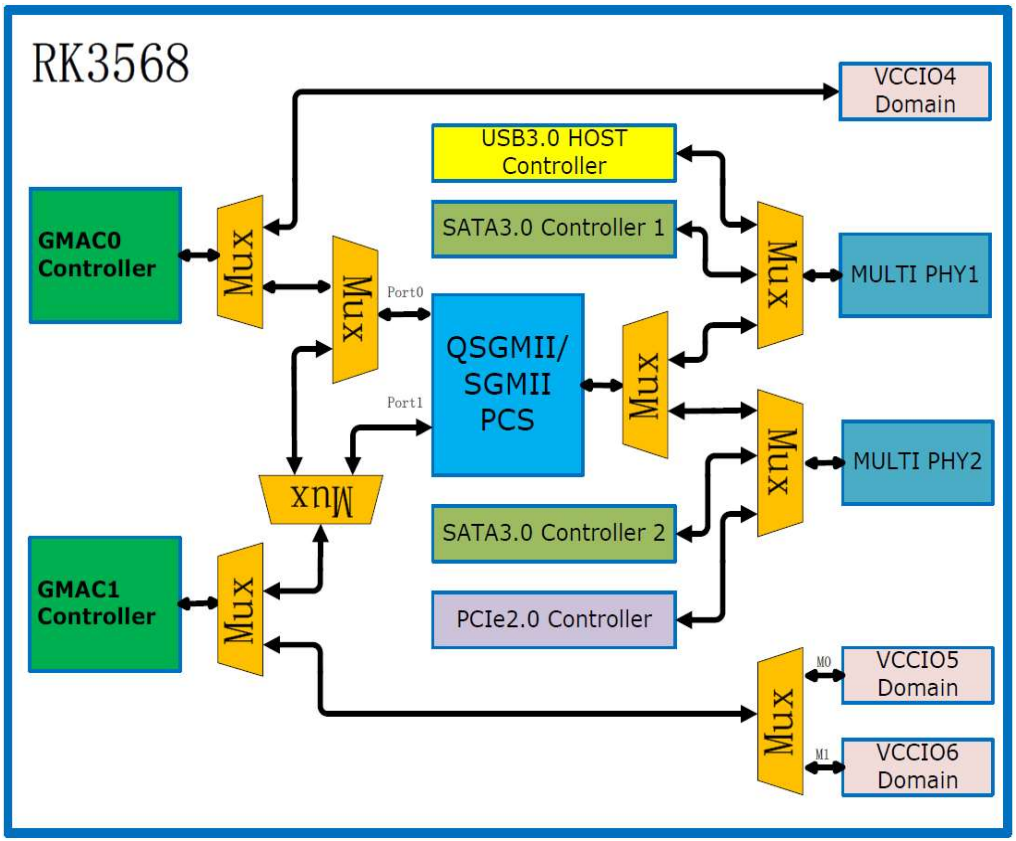

Note:

M0 M1 M2 indicates that the same function is multiplexed to different IO
When selecting, only M0 or M1 or M2 can be selected
eg:Not supported UART1_TX_M0 and UART1_RX_M1 combination

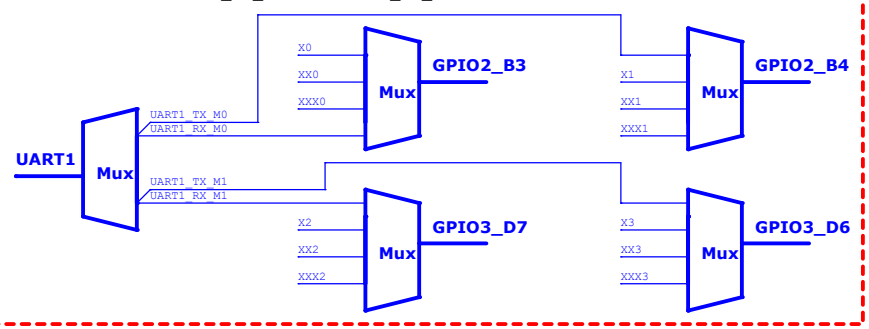

It is suitable for other interfaces

Rockchip 瑞芯微电子	Rockchip Electronics Co., Ltd				
Project:	RK3568_AIoT_REF_SCH				
File:	07.UART Map/GMAC0/1 Path Map				
Date:	Tuesday, September 26, 2023			Rev:	V2.0
Designed by:	Zhangdz	Reviewed by:	Default	Sheet:	8 of 72

Default I2C Map

Note:
M0 M1 M2 indicates that the same function is multiplexed to different IO. When selecting, only M0 or M1 or M2 can be selected
eg:
Not supported I2C1_SCL_M0 and I2C1_SDA_M1 combination

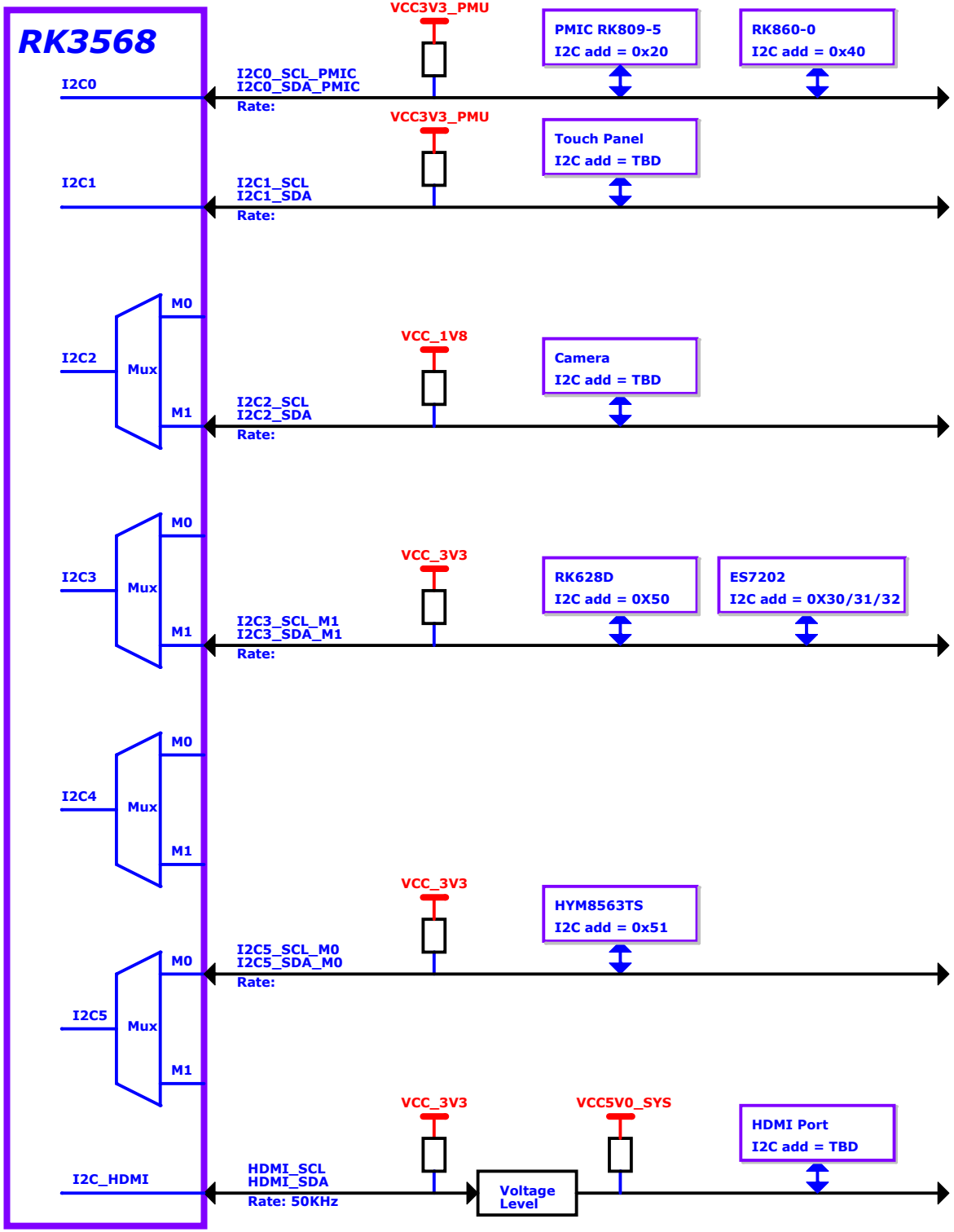

Rockchip Confidential

Rockchip 瑞芯微电子	Rockchip Electronics Co., Ltd				
Project:	RK3568_AIoT_REF_SCH				
File:	08.I2C Bus Map				
Date:	Tuesday, September 26, 2023			Rev:	V2.0
Designed by:	Zhangdz	Reviewed by:	Default	Sheet:	9 of 72

MULTI_PHY0/1/2 Path Map

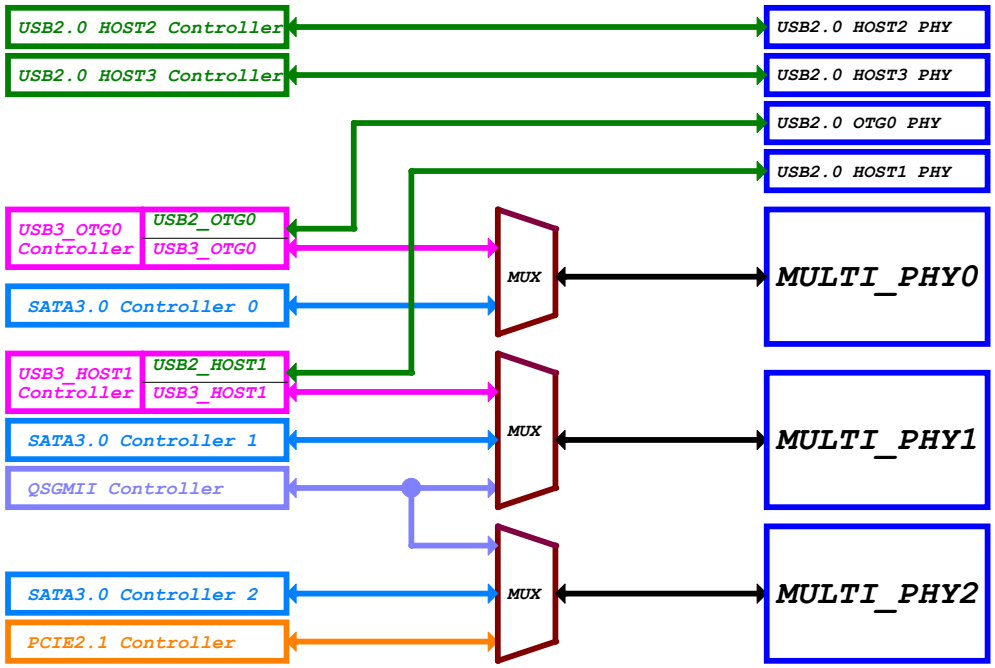

VOP Path Map

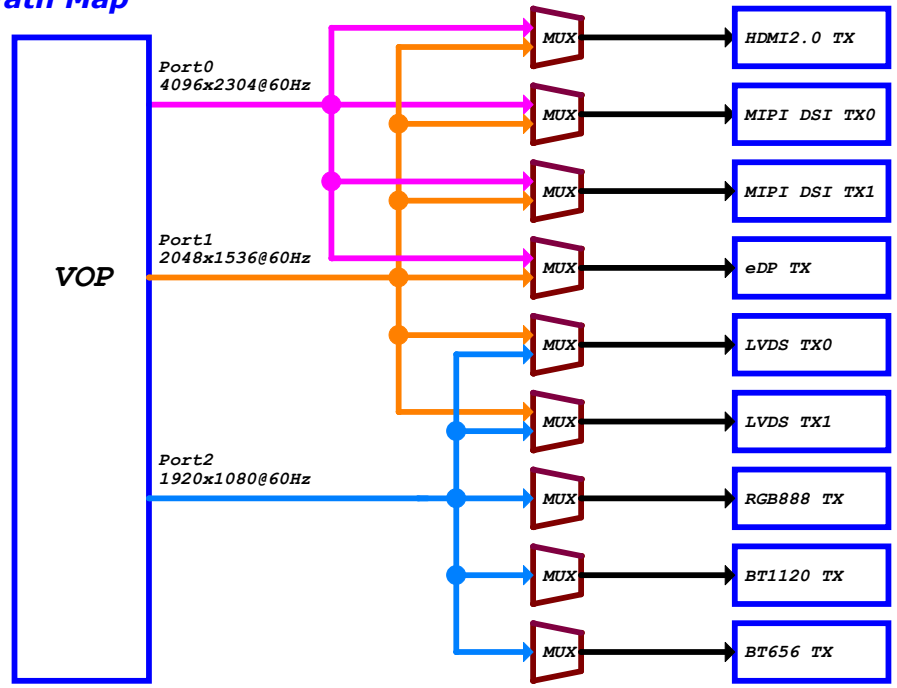

USB3.0 OTG0

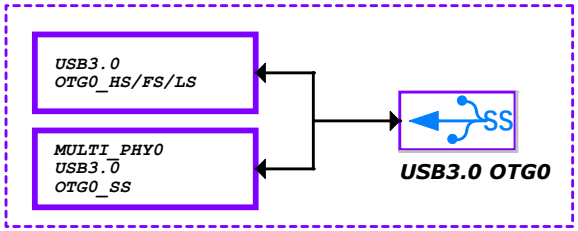

USB3.0 HOST1

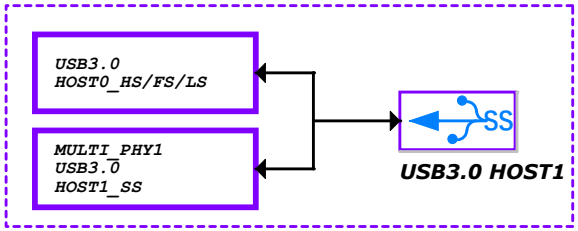

PCIe3.0 PHY

Option1	PCIe3.0 x2Lane	PCIE30_REFCLK (RC/EP:input)	PCIE30_TX0 PCIE30_RX0 PCIE30_TX1 PCIE30_RX1	PCIE30X2_CLKREQn PCIE30X2_WAKEn PCIE30X2_PERSTn PCIE30X2_BUTTONRSTn	RC or EP
Option2	PCIe3.0 x1Lane + PCIe3.0 x1Lane	PCIE30_REFCLK (RC:input)	PCIE30_TX0 PCIE30_RX0	PCIE30X2_CLKREQn PCIE30X2_WAKEn PCIE30X2_PERSTn PCIE30X2_BUTTONRSTn	Only RC
			PCIE30_TX1 PCIE30_RX1	PCIE30X1_CLKREQn PCIE30X1_WAKEn PCIE30X1_PERSTn PCIE30X1_BUTTONRSTn	Only RC

PCIe3.0 REFCLK-RC Mode

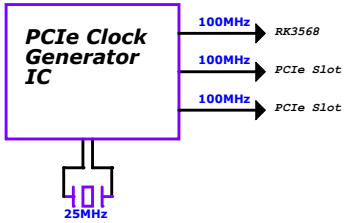

PCIe3.0 REFCLK-EP Mode

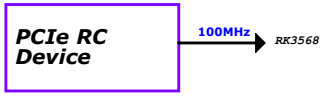

PCIe2.1 PHY

MULTI_ PHY2	PCIe2.1 x1Lane	PCIE20_REFCLK (RC:output)	PCIE20_TX PCIE20_RX	PCIE20_CLKREQn PCIE20_WAKEn PCIE20_PERSTn PCIE20_BUTTONRSTn	Only RC

PCIe2.1 REFCLK-RC Mode

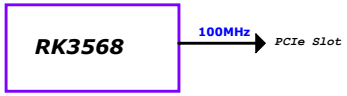

Rockchip Confidential

Rockchip 瑞芯微电子	Rockchip Electronics Co., Ltd		
Project:	RK3568_AIoT_REF_SCH		
File:	09.PCIE30/MULTI_PHY/VOP Fun Map		
Date:	Tuesday, September 26, 2023	Rev:	V2.0
Designed by: Zhangtz	Reviewed by: Default	Sheet:	10 of 72

RK3568_ABCDE (Power&Gnd)

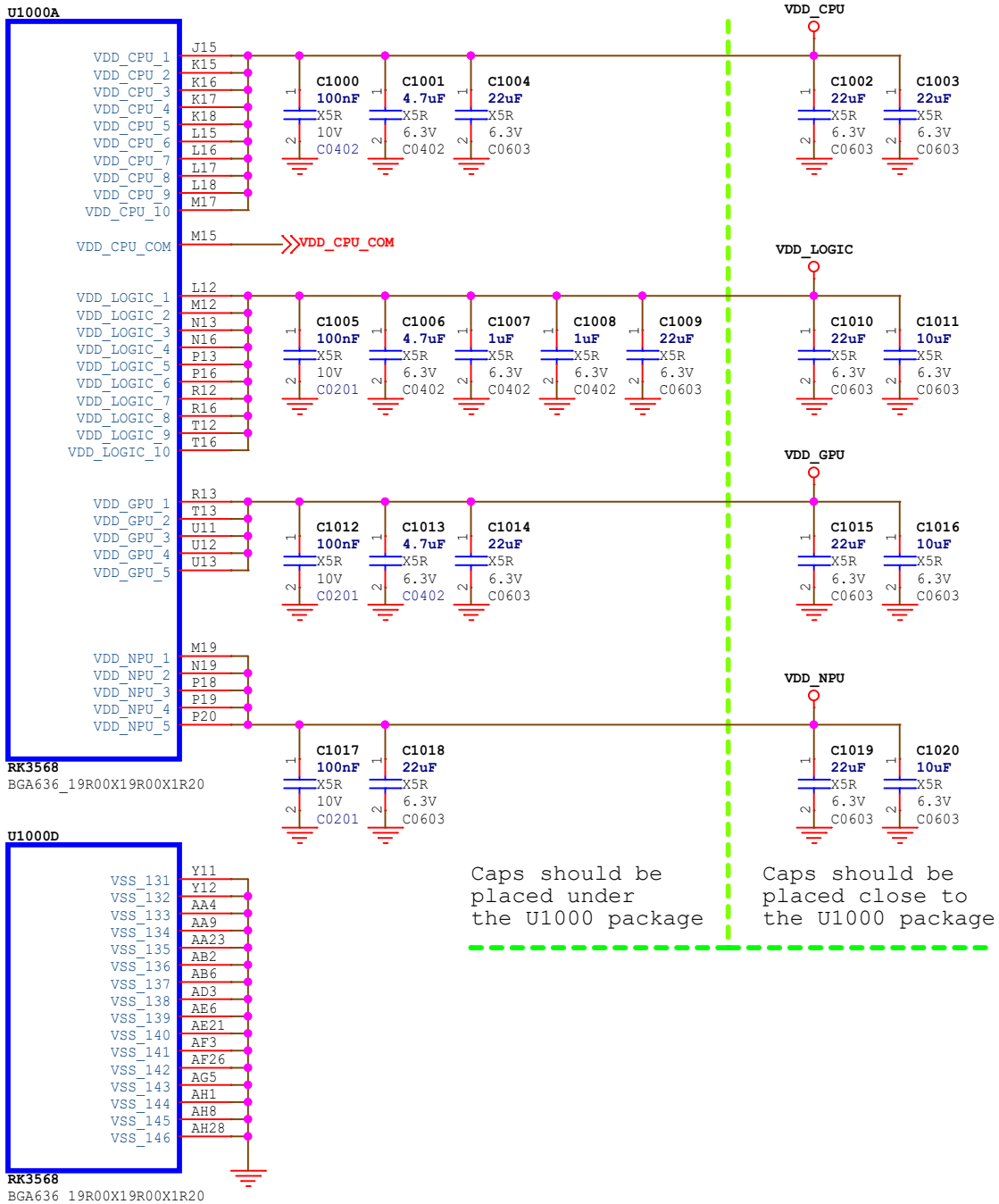

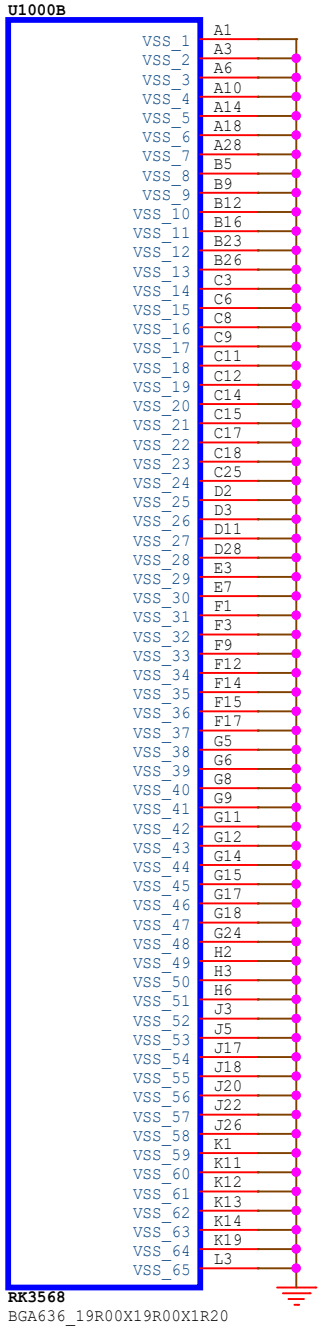

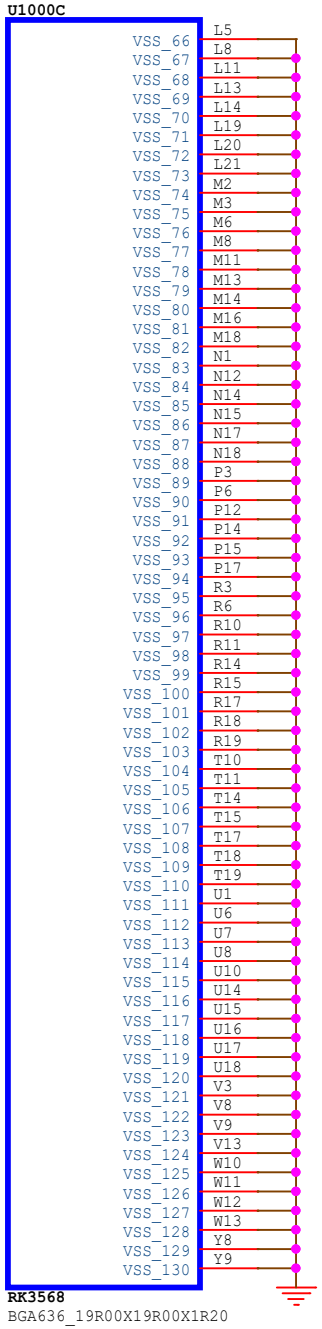

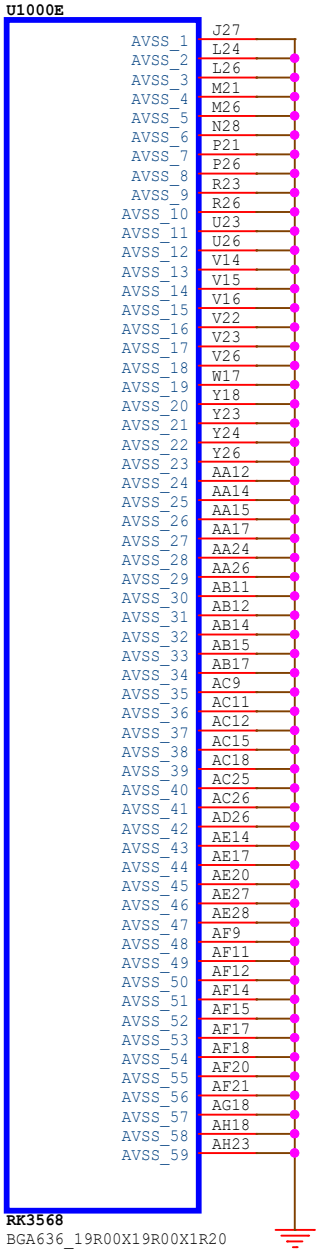

Rockchip Confidential

Rockchip 瑞芯微电子	Rockchip Electronics Co., Ltd				
Project:	RK3568_AIoT_REF_SCH				
File:	10.RK3568_Power/GND				
Date:	Tuesday, September 26, 2023			Rev:	V2.0
Designed by:	Zhangdz	Reviewed by:	Default	Sheet:	11 of 72

RK3568_F (DDR PHY)

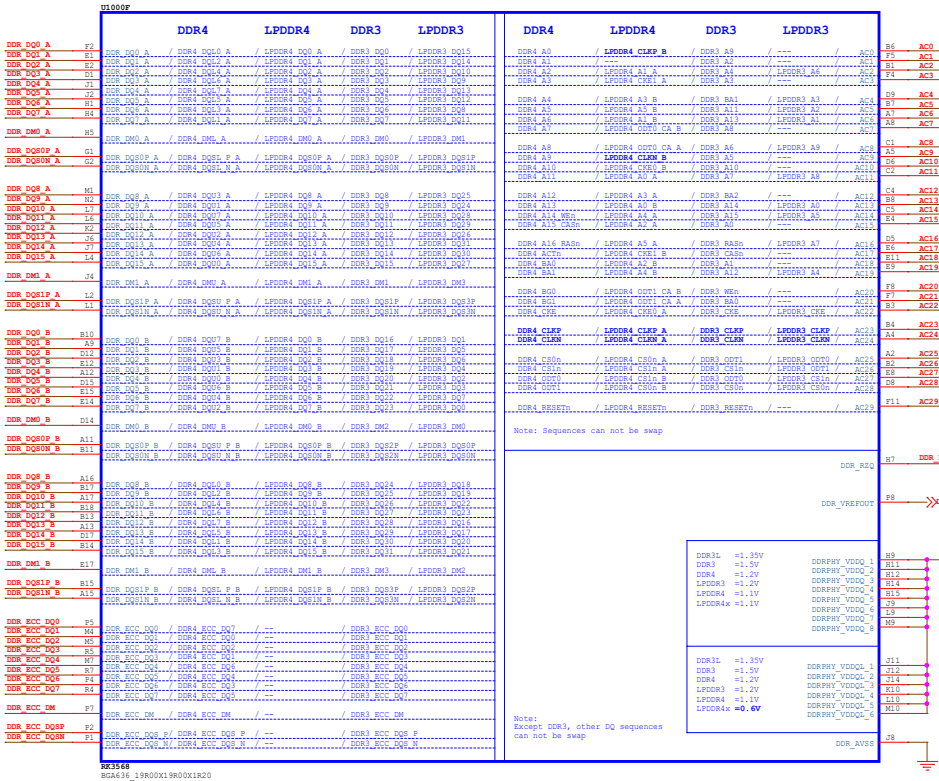

Default DDR4 AC / LPDDR4/4x AC / DDR3 AC / LPDDR3 AC

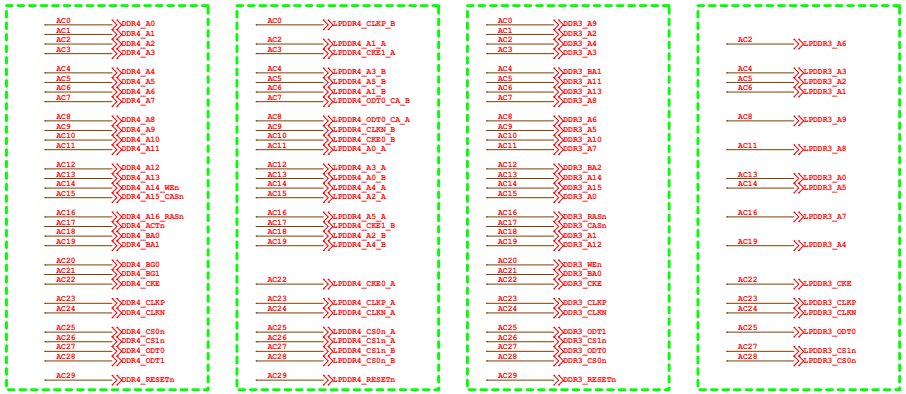

R1100 120R 1% R0201 — DDR_RZQ

R1101 120R 1% R0201 — VCC_DDR — DDRPHY_VREFOUT

For DDR4/DDR3/LPDDR3 mode, a 120 ohm +/-1% tolerance external resistor must be connected between the DDR_RZQ pin and VSS pin

For LPDDR4/LPDDR4x mode, a 120 ohm +/-1% tolerance external resistor must be connected between the DDR_RZQ pin and DDRPHY_VDDQ pin

Default DDR4

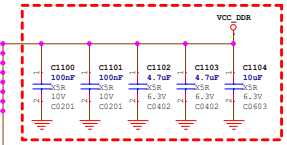

Note:
Caps should be placed under the U1000 package

Note:

LPDDR4x mode:
Pin J11,J12,J14,K10,L10,M10 connected to VCC0V6_DDR power supply
For example

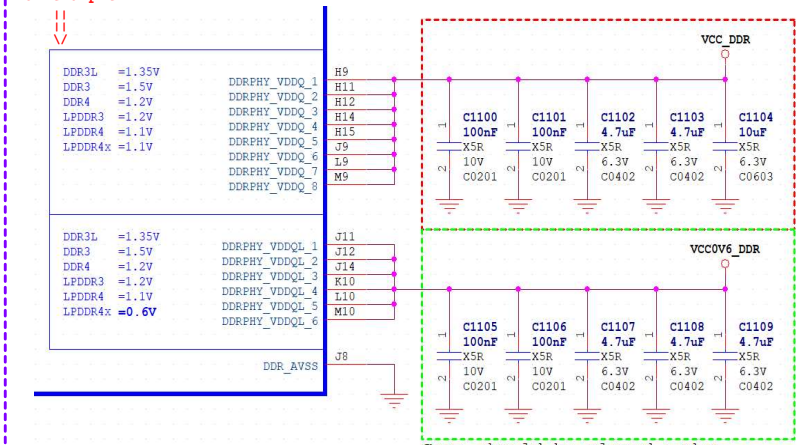

Caps should be placed under the U1000 package

Default DDR4 DQ / LPDDR4/4x DQ / DDR3 DQ / LPDDR3 DQ

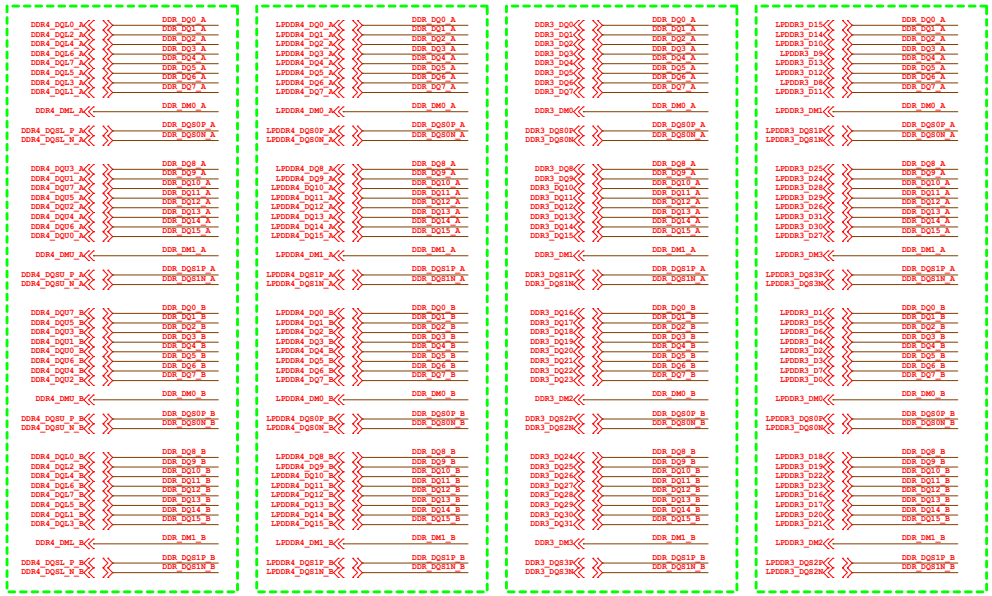

DDR4 ECC DQ / DDR3 ECC DQ

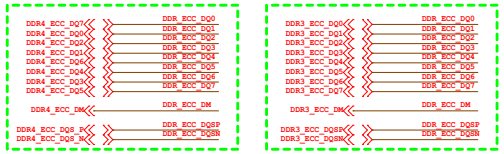

Note:

ECC DRAM the Row/Bank/Col/BG must be the same as the main DRAM, and the rate must be the same as the main DRAM, it is recommended to use the same model as the main DRAM.

Note: When ECC function is required, all DQs in DDR4 do not support adjustment, and template order must be provided according to RK

Rockchip Confidential

Rockchip 瑞芯微电子	Rockchip Electronics Co., Ltd		
Project:	RK3568_AIoT_REF_SCH		
File:	11.RK3568_DDR PHY		
Date:	Tuesday, September 26, 2023	Rev:	V2.0
Designed by: Zhangtz	Reviewed by: Default	Sheet:	12 of 72

RK3568_G(OSC/PLL/PMUIO1/2)

Note:
Adjusted the load capacitance according to the crystal specification.

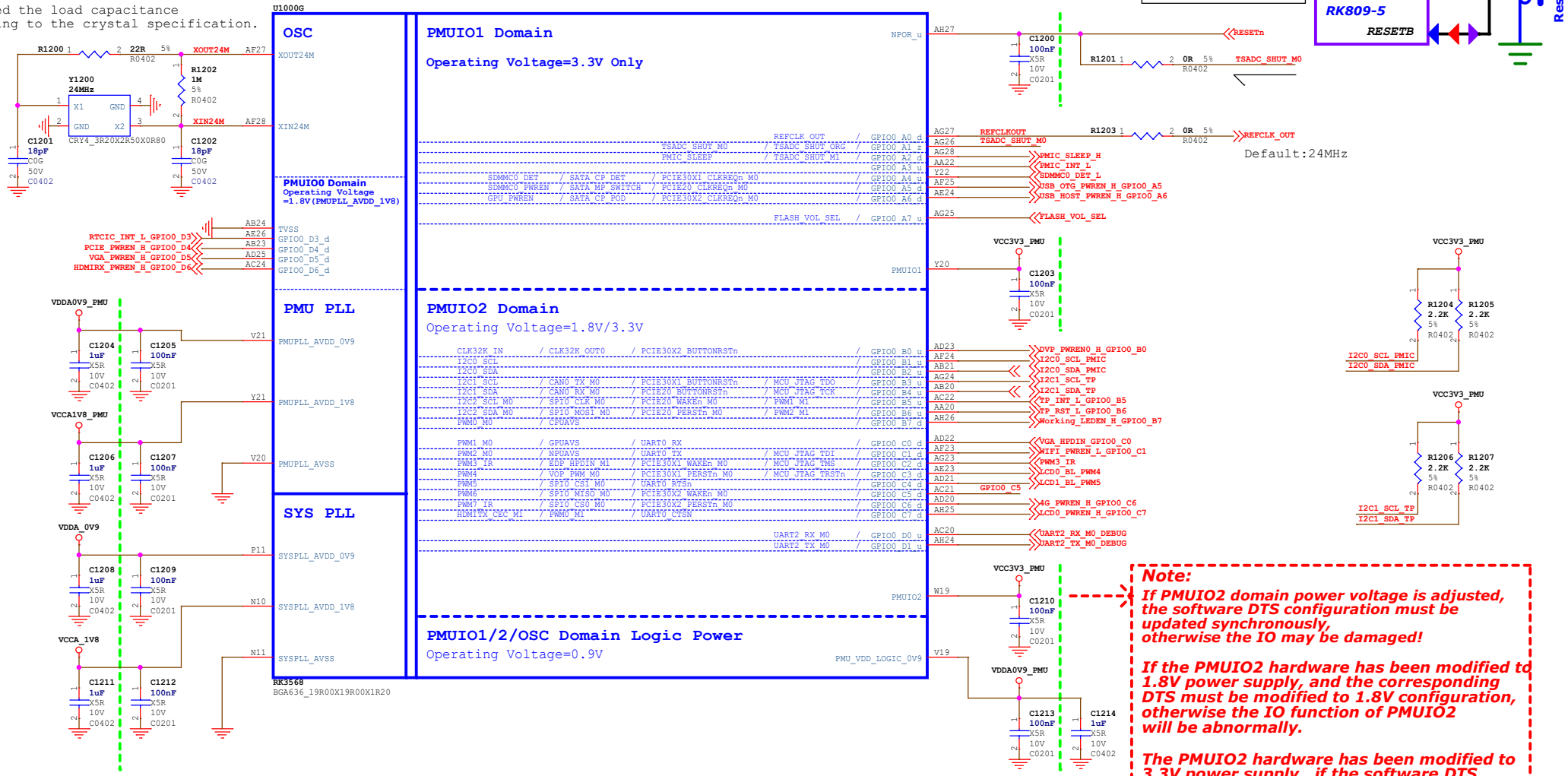

Note:
Caps of between dashed green lines and U1000 should be placed under the U1000 package.
Other caps should be placed close to the U1000 package

Rockchip Confidential

Rockchip 瑞芯微电子	Rockchip Electronics Co., Ltd				
Project:	RK3568_AIoT_REF_SCH				
File:	12.RK3568_OSC/PLL/PMUIO				
Date:	Tuesday, September 26, 2023			Rev:	V2.0
Designed by:	Zhangdz	Reviewed by:	Default	Sheet:	13 of 72

RK3568_I(VCCIO2 Domain)

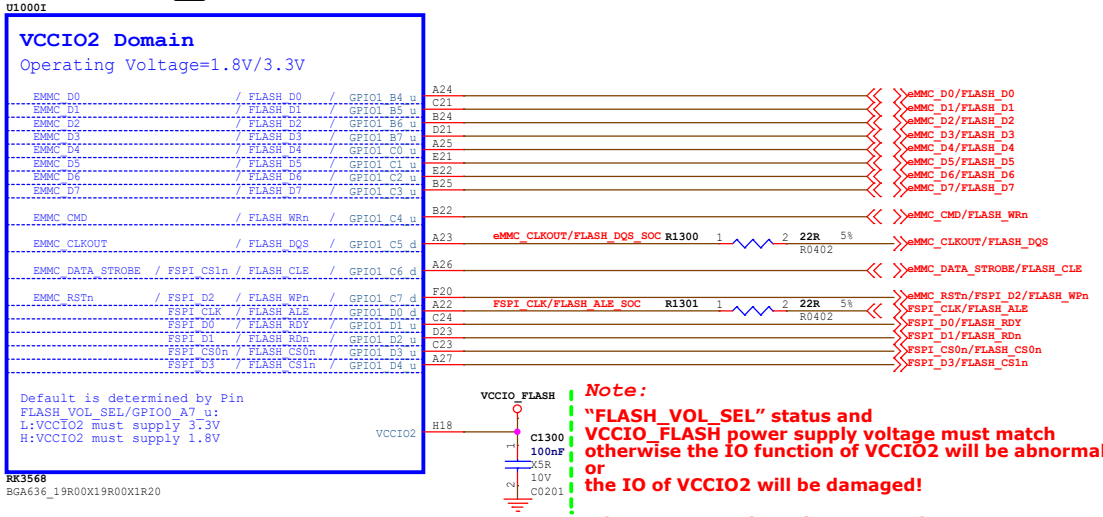

Note:

"FLASH_VOL_SEL" status and VCCIO_FLASH power supply voltage must match otherwise the IO function of VCCIO2 will be abnormally or the IO of VCCIO2 will be damaged!

When VCCIO2 voltage is connected to 1.8V, FLASH_VOL_SEL must be high
When VCCIO2 voltage is connected to 3.3V, FLASH_VOL_SEL must be low
If VCCIO2 power supply voltage and FLASH_VOL_SEL fails to meet the above relationship, its function will be abnormally(for example, it cannot be started normally) or IO will be damaged.

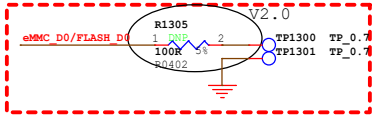

Note:

For eMMC or Nand Flash:
If eMMC_D0/FLASH_D0=0V at after power on and reset, then system will enter into Maskrom mode.

Layout note:

Test point must be placed on the line, and no branch can be added

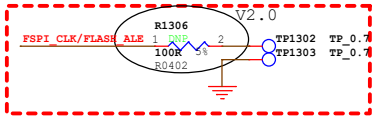

Note:

For SPI Flash:
If FSPI_CLK=0V at after power on and reset, then system will enter into Maskrom mode.

Note:

Reserve TestPoint for put the system into Maskrom mode to update the firmware
When writing mismatched firmware or other conditions result in boot failure, use this test point

Except in this case, please use Recovery Key
Put the system into loader mode to update the firmware

RK3568_J(VCCIO3 Domain)

Note:

Caps of between dashed green lines and U1000 should be placed under the U1000 package

Default

SDMMC0&JTAG

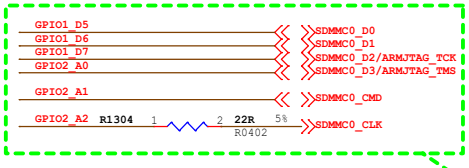

UART&CAN&JTAG

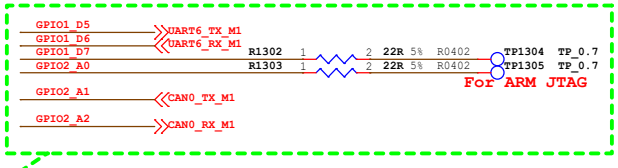

Option

Note:

If VCCIO3 domain power voltage is adjusted, the software DTS configuration must be updated synchronously, otherwise the IO may be damaged!

If the VCCIO3 hardware has been modified to 1.8V power supply, and the corresponding DTS must be modified to 1.8V configuration, otherwise the IO function of VCCIO3 will be abnormally.

The VCCIO3 hardware has been modified to 3.3V power supply, if the software DTS configuration is still 1.8V configuration, the IO of VCCIO3 will be damaged!

If a board needs to be compatible with two voltage choices, recommended to enable BOM_ID

Rockchip Confidential

Rockchip 瑞芯微电子	Rockchip Electronics Co., Ltd				
Project:	RK3568_AIoT_REF_SCH				
File:	13.RK3568_Flash/SD Controller				
Date:	Wednesday, September 27, 2023			Rev:	V2.0
Designed by:	Zhangdz	Reviewed by:	Default	Sheet:	14 of 72

RK3568_U(USB3.0/SATA/QSGMII/PCIe2.0 x1)

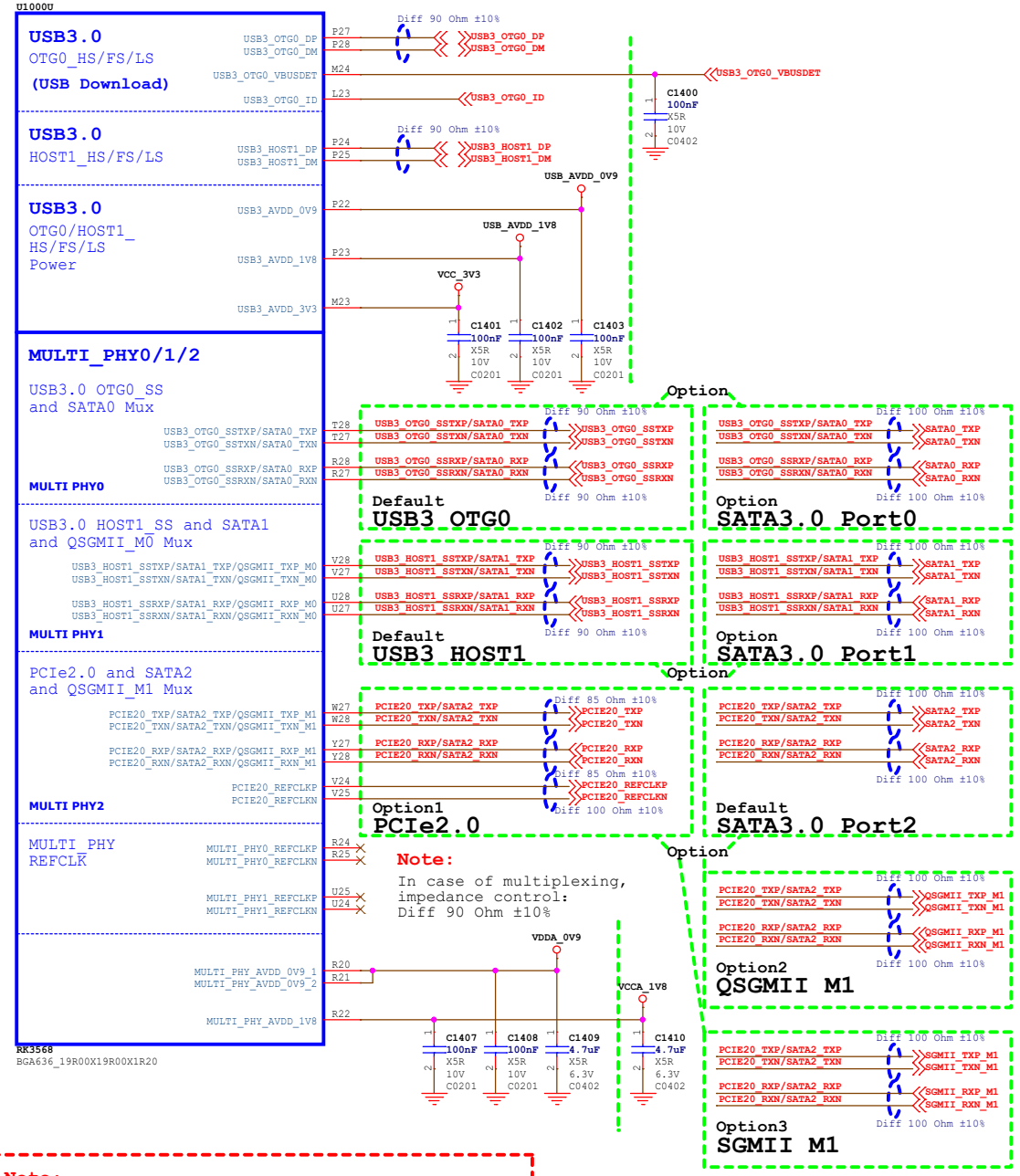

QSGMII can choose:
QSGMII_TXP_M0/QSGMII_TXN_M0
QSGMII_RXP_M0/QSGMII_RXN_M0
or
QSGMII_TXP_M1/QSGMII_TXN_M1
QSGMII_RXP_M1/QSGMII_RXN_M1

SGMII can choose:
SGMII_TXP_M0/SGMII_TXN_M0
SGMII_RXP_M0/SGMII_RXN_M0
or
SGMII_TXP_M1/SGMII_TXN_M1
SGMII_RXP_M1/SGMII_RXN_M1

See "07.UART Map/GMAC0/1 Path Map"
GMAC0/1 Path Map

Note:
Caps of between dashed green lines and U1000 should be placed under the U1000 package.
Other caps should be placed close to the U1000 package

Rockchip Confidential

RK3568_V(USB2.0 HOST)

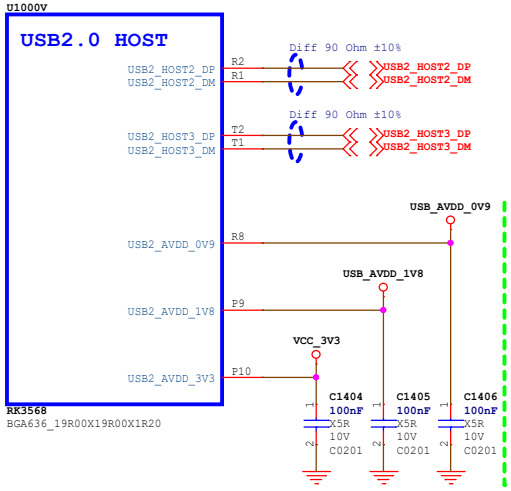

RK3568_W(PCIe3.0 x2)

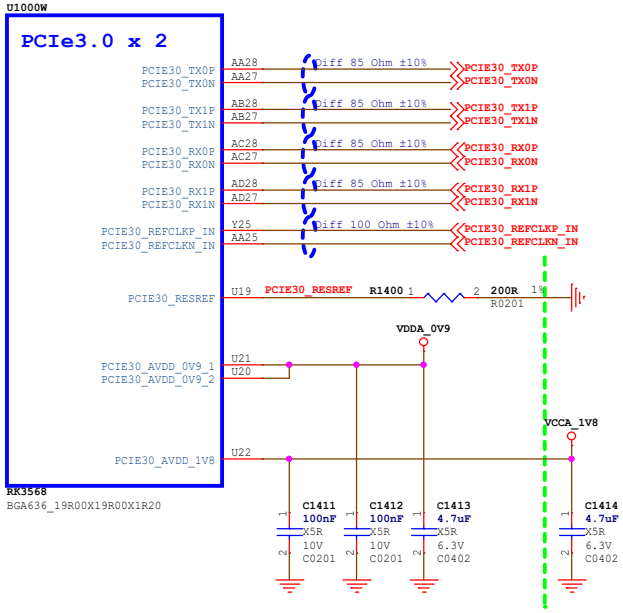

Rockchip 瑞芯微电子	Rockchip Electronics Co., Ltd				
Project:	RK3568_AIoT_REF_SCH				
File:	14.RK3568_USB/PCIe/SATA PHY				
Date:	Tuesday, September 26, 2023			Rev:	V2.0
Designed by:	Zhangdz	Reviewed by:	Default	Sheet:	15 of 72

RK3568_K(VCCIO4 Domain)

Note: *If VCCIO4 domain power voltage is adjusted, the software DTS configuration must be updated synchronously, otherwise the IO may be damaged!*
If the VCCIO4 hardware has been modified to 1.8V power supply, and the corresponding DTS must be modified to 1.8V configuration, otherwise the IO function of VCCIO4 will be abnormally.
The VCCIO4 hardware has been modified to 3.3V power supply, if the software DTS configuration is still 1.8V configuration, the IO of VCCIO4 will be damaged!

U1000K

VCCIO4 Domain
Operating Voltage=1.8V/3.3V

SDMMC1_D0	GMAC0_RXD2	UART6_RX_M0			GPIO2_A3_u
SDMMC1_D1	GMAC0_RXD3	UART6_TX_M0			GPIO2_A4_u
SDMMC1_D2	GMAC0_RXCLK	UART7_RX_M0			GPIO2_A5_u
SDMMC1_D3	GMAC0_TXD2	UART7_TX_M0			GPIO2_A6_u
SDMMC1_CMD	GMAC0_TXD3	UART9_RX_M0			GPIO2_A7_u
SDMMC1_CLK	GMAC0_TXCLK	UART9_TX_M0			GPIO2_B0_d
SDMMC1_PWREN	I2C4_SDA_M1	UART8_RTSn_M0	CAN2_RX_M1		GPIO2_B1_d
SDMMC1_DET	I2C4_SCL_M1	UART8_CTSn_M0	CAN2_TX_M1		GPIO2_B2_u
	GMAC0_TXD0	UART1_RX_M0			GPIO2_B3_u
	GMAC0_TXD1	UART1_TX_M0			GPIO2_B4_u
	GMAC0_TXEN	UART1_RTSn_M0	SPI1_CLK_M0		GPIO2_B5_u
	GMAC0_RXD0	UART1_CTSn_M0	SPI1_MISO_M0		GPIO2_B6_u
I2S2_SCLK_RX_M0	GMAC0_RXD1	UART6_RTSn_M0	SPI1_MOSI_M0		GPIO2_B7_d
I2S2_LRCK_RX_M0	GMAC0_RXDV_CRS	UART6_CTSn_M0	SPI1_CS0_M0		GPIO2_C0_d
I2S2_MCLK_M0	ETH0_REFCLKO_25M	UART7_RTSn_M0	SPI2_CLK_M0		GPIO2_C1_d
I2S2_SCLK_TX_M0	GMAC0_MCLKINOUT	UART7_CTSn_M0	SPI2_MISO_M0		GPIO2_C2_d
I2S2_LRCK_TX_M0	GMAC0_MDC	UART9_RTSn_M0	SPI2_MOSI_M0		GPIO2_C3_d
I2S2_SDO_M0	GMAC0_MDIO	UART9_CTSn_M0	SPI2_CS0_M0		GPIO2_C4_d
I2S2_SDI_M0	GMAC0_RXER	UART8_TX_M0	SPI2_CS1_M0		GPIO2_C5_d
CLK32K_OUT1		UART8_RX_M0	SPI1_CS1_M0		GPIO2_C6_d

VCCIO4 — J21

RK3568
BGA636_19R00X19R00X1R20

VCCIO4 — C1500 100nF X5R 10V C0201

Default

WIFI+BT+PCM

GPIO2_A3			SDMMC1_D0
GPIO2_A4			SDMMC1_D1
GPIO2_A5			SDMMC1_D2
GPIO2_A6			SDMMC1_D3
GPIO2_A7			SDMMC1_CMD
GPIO2_B0	R1502	22R 5% R0402	SDMMC1_CLK
GPIO2_B1			WIFI_REG_ON_H_GPIO2_B1
GPIO2_B2			WIFI_WAKE_HOST_H_GPIO2_B2
GPIO2_B3			UART1_RX_M0
GPIO2_B4			UART1_TX_M0
GPIO2_B5			UART1_RTSn_M0
GPIO2_B6			UART1_CTSn_M0
GPIO2_B7			BT_REG_ON_H_GPIO2_B7
GPIO2_C0			BT_WAKE_HOST_H_GPIO2_C0
GPIO2_C1			HOST_WAKE_BT_H_GPIO2_C1
GPIO2_C2			SOC_PCM_CLK
GPIO2_C3			SOC_PCM_SYNC
GPIO2_C4			SOC_PCM_OUT
GPIO2_C5			SOC_PCM_IN
GPIO2_C6	R1508	0R 5% R0402	CLK32K_OUT1_WIFI

VCCIO4 — R1510 0R 5% R0402 — VCCIO_WL

If a board needs to be compatible with two voltage choices, recommended to enable BOM_ID

Option

RGMII0

GPIO2_A3			GMAC0_RXD2
GPIO2_A4			GMAC0_RXD3
GPIO2_A5			GMAC0_RXCLK
GPIO2_A6	R1500	22R 5% R0402	GMAC0_TXD2
GPIO2_A7	R1501	22R 5% R0402	GMAC0_TXD3
GPIO2_B0	R1503	22R 5% R0402	GMAC0_TXCLK
GPIO2_B3	R1504	22R 5% R0402	GMAC0_TXD0
GPIO2_B4	R1505	22R 5% R0402	GMAC0_TXD1
GPIO2_B5	R1506	22R 5% R0402	GMAC0_TXEN
GPIO2_B6			GMAC0_RXD0
GPIO2_B7			GMAC0_RXD1
GPIO2_C0			GMAC0_RXDV_CRS
GPIO2_C1	R1507	22R 5% R0402	ETH0_REFCLKO_25M
GPIO2_C2			GMAC0_MCLKINOUT
GPIO2_C3	R1513	0R 5% R0402	GMAC0_MDC
GPIO2_C4			GMAC0_MDIO
GPIO2_C5			GMAC0_RXER

V1.1

VCCIO4 — R1509 0R 5% R0402 — VCC_1V8; R1511 DNP 0R 5% R0402 — VCC_3V3

If a board needs to be compatible with two voltage choices, recommended to enable BOM_ID

Note:
If Ethernet PHY uses other models, please note whether the default pull-up and pull-down of GPIO affect Ethernet PHY function

At present, TXEN will be affected if it defaults to high level need to add a 4.7K resistance to ground

GMAC0_TXEN — R1515 4.7K 5% R0402 DNP

Note:
According to the actual choice of mounted Cannot be mounted at the same time
Default:1.8V
Select the voltage according to the application

RTL8201F/YT8512C only support 3.3V IO
VCCIO4 must be changed to 3.3V power supply

RK3568_N(VCCIO7 Domain)

Note:
When use HDMI, HDMITX_SCL/SDA cannot be shared with other devices

U1000N

VCCIO7 Domain
Operating Voltage=1.8V/3.3V

PWM14_M1	SPI3_CLK_M1	CAN1_RX_M1	PCIE30X2_CLKREQn_M2	I2S3_MCLK_M1	GPIO4_C2_d
PWM15_IR_M1	SPI3_MOSI_M1	CAN1_TX_M1	PCIE30X2_WAKEn_M2	I2S3_SCLK_M1	GPIO4_C3_d
EDP_HPDIN_M0	SPDIF_TX_M2	SATA2_ACT_LED	PCIE30X2_PERSTn_M2	I2S3_LRCK_M1	GPIO4_C4_d
PWM12_M1	SPI3_MISO_M1	SATA1_ACT_LED	UART9_TX_M1	I2S3_SDO_M1	GPIO4_C5_d
PWM13_M1	SPI3_CS0_M1	SATA0_ACT_LED	UART9_RX_M1	I2S3_SDI_M1	GPIO4_C6_d
HDMITX_SCL	I2C5_SCL_M1				GPIO4_C7_u
HDMITX_SDA	I2C5_SDA_M1				GPIO4_D0_u
HDMITX_CEC_M0	SPI3_CS1_M1				GPIO4_D1_u
					GPIO4_D2_d

VCCIO7 — V12 — VCC_3V3 — C1509 100nF X5R 10V C0201

AF8		4G_DISABLE_GPIO4_C2
AA11		HDMIRX_INT_L_GPIO4_C3
AH7		SATA2_ACT_LED
AD8	GPIO4_C5	
AE8	GPIO4_C6	
AG8		HDMITX_SCL
AG7		HDMITX_SDA
AH6		HDMITX_CEC_M0
AB9		HDMIRX_RST_L_GPIO4_D2

RK3568
BGA636_19R00X19R00X1R20

If a board needs to be compatible with two voltage choices, recommended to enable BOM_ID

Note:
If VCCIO7 domain power voltage is adjusted, the software DTS configuration must be updated synchronously, otherwise the IO may be damaged!

If the VCCIO7 hardware has been modified to 1.8V power supply, and the corresponding DTS must be modified to 1.8V configuration, otherwise the IO function of VCCIO7 will be abnormally.

The VCCIO7 hardware has been modified to 3.3V power supply, if the software DTS configuration is still 1.8V configuration, the IO of VCCIO7 will be damaged!

Default

GPIO4_C5	UART9_TX_M1
GPIO4_C6	UART9_RX_M1

GPIO4_C5	SATA1_ACT_LED
GPIO4_C6	SATA0_ACT_LED

Option

Rockchip Confidential

RK3568_O(SARADC/OTP)

U1000O

SARADC

Recovery/ SARADC_VIN0	B27	SARADC_VIN0_KEY/RECOVERY	C1501	1nF X5R 50V C0402
SARADC_VIN1	C26	SARADC_VIN1_HW_ID	C1502	1nF X5R 50V C0402
SARADC_VIN2	D24	SARADC_VIN2_HP_HOOK	C1503	1nF X5R 50V C0402
SARADC_VIN3	E23	SARADC_VIN3_BOM_ID	C1504	1nF X5R 50V C0402
SARADC_VIN4	G21	SARADC_VIN4	C1505	1nF X5R 50V C0402
SARADC_VIN5	F22	SARADC_VIN5	C1506	1nF X5R 50V C0402
SARADC_VIN6	G20	SARADC_VIN6	C1507	1nF X5R 50V C0402
SARADC_VIN7	F21	SARADC_VIN7	C1508	1nF X5R 50V C0402

SARADC_AVDD_1V8 — H22 — VCCA_1V8 — C1510 100nF X5R 10V C0201

OTP — OTP_VCC18 — H20 — VCC_1V8 — C1511 100nF X5R 10V C0201

RK3568
BGA636_19R00X19R00X1R20

Note:
Caps of between dashed green lines and U1000 should be placed under the U1000 package

Note:
Must be mounted

VCCA_1V8 — R1512 10K 1% R0402 — SARADC_VIN0_KEY/RECOVERY

SARADC_VIN0_KEY/RECOVERY — R1516 DNP 100K 5% R0402 — TP1501 TP_0.7; TP1502 TP_0.7

V2.0

Note:
If there is no Key requirement, two test points must be reserved to facilitate firmware update

It is suggested to reserve a Key to facilitate the development debug

If SARADC_VIN0=0V at after power on and reset, then system will enter into loader mode.

SARADC_VIN0_KEY/RECOVERY
SARADC_VIN1_HW_ID
SARADC_VIN2_HP_HOOK
SARADC_VIN3_BOM_ID
SARADC_VIN4
SARADC_VIN5
SARADC_VIN6
SARADC_VIN7

Rockchip 瑞芯微电子	Rockchip Electronics Co., Ltd		
Project:	RK3568_AIoT_REF_SCH		
File:	15.RK3568_SARADC/GPIO		
Date:	Wednesday, September 27, 2023	Rev:	V2.0
Designed by: Zhangdz	Reviewed by: Default	Sheet:	16 of 72

RK3568_P(MIPI_CSI_RX)

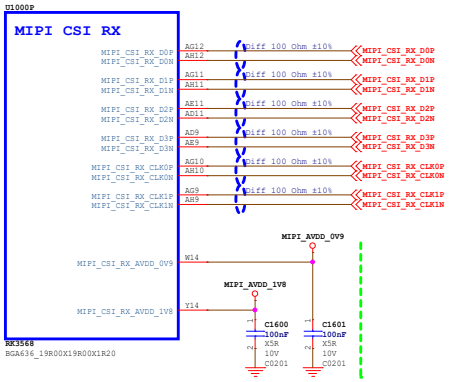

Option1	Sensor1 x4Lane	MIPI_CSI_RX_D0-3 MIPI_CSI_RX_CLK0
Option2	Sensor1 x2Lane + Sensor2 x2Lane	MIPI_CSI_RX_D0-1 MIPI_CSI_RX_CLK0
		MIPI_CSI_RX_D2-3 MIPI_CSI_RX_CLK1

RK3568_M(VCCIO6 Domain)

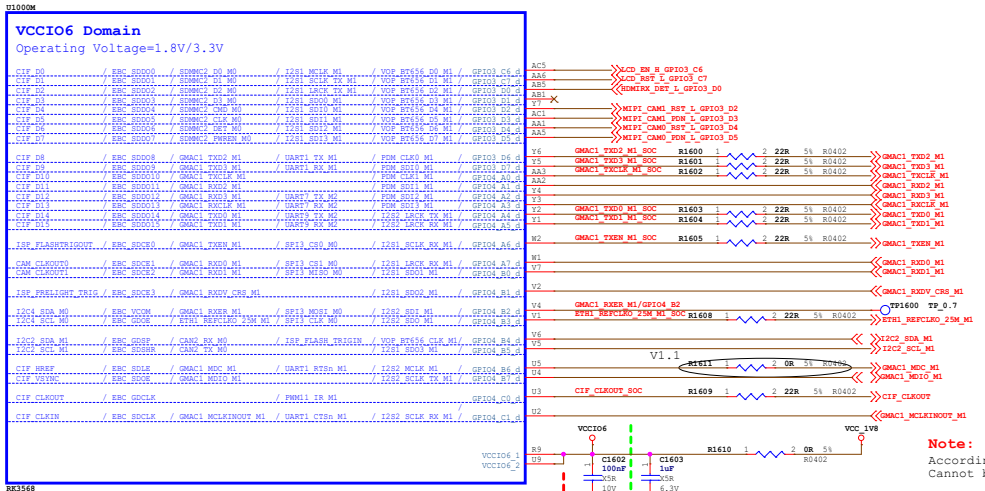

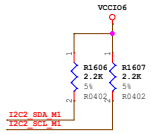

Mode	16bit	12bit	10bit	8bit
CIF_D0	D0	--	--	--
CIF_D1	D1	--	--	--
CIF_D2	D2	--	--	--
CIF_D3	D3	--	--	--
CIF_D4	D4	D0	--	--
CIF_D5	D5	D1	--	--
CIF_D6	D6	D2	D0	--
CIF_D7	D7	D3	D1	--
CIF_D8	D8	D4	D2	D0
CIF_D9	D9	D5	D3	D1
CIF_D10	D10	D6	D4	D2
CIF_D11	D11	D7	D5	D3
CIF_D12	D12	D8	D6	D4
CIF_D13	D13	D9	D7	D5
CIF_D14	D14	D10	D8	D6
CIF_D15	D15	D11	D9	D7

BT1120 16bit Mode:
Default: D0-D7 <--> Y0-Y7 , D8-D15 <--> C0-C7
Swap ON: D0-D7 <--> C0-C7 , D8-D15 <--> Y0-Y7

Note:
Caps of between dashed green lines and U1000
should be placed under the U1000 package.
Other caps should be placed close to the U1000 package

Note:
If VCCIO6 domain power voltage is adjusted, the software DTS configuration must be updated synchronously, otherwise the IO may be damaged!

If the VCCIO6 hardware has been modified to 1.8V power supply, and the corresponding DTS must be modified to 1.8V configuration, otherwise the IO function of VCCIO6 will be abnormally.

The VCCIO6 hardware has been modified to 3.3V power supply, if the software DTS configuration is still 1.8V configuration, the IO of VCCIO6 will be damaged!

Note:
According to the actual choice of mounted
Cannot be mounted at the same time

Default:1.8V
Select the voltage according to the application

If the IO domain is to be used as FEPHY,
since some FEPHY only support 3.3V IO,
it is recommended to reallocate GPIO
to reduce the cost of level conversion

If a board needs to be compatible with two voltage choices, recommended to enable BOM_ID

GMAC	Direction	GEPHY	GMAC	Direction	FEPHY
GMACx_TXD0	------>	PHYx_TXD0	GMACx_TXD0	------>	PHYx_TXD0
GMACx_TXD1	------>	PHYx_TXD1	GMACx_TXD1	------>	PHYx_TXD1
GMACx_TXD2	------>	PHYx_TXD2			
GMACx_TXD3	------>	PHYx_TXD3			
GMACx_TXEN	------>	PHYx_TXEN	GMACx_TXEN	------>	PHYx_TXEN
GMACx_TXCLK	------>	PHYx_TXCLK			
GMACx_RXD0	<------	PHYx_RXD0	GMACx_RXD0	<------	PHYx_RXD0
GMACx_RXD1	<------	PHYx_RXD1	GMACx_RXD1	<------	PHYx_RXD1
GMACx_RXD2	<------	PHYx_RXD2			
GMACx_RXD3	<------	PHYx_RXD3			
GMACx_RXDV	<------	PHYx_RXDV	GMACx_RXDV	<------	PHYx_CRS_DV
GMACx_RXCLK	<------	PHYx_RXCLK			
GMACx_RXER			GMACx_RXER	<------	PHYx_RXER
GMACx_MDC	------>	PHYx_MDC	GMACx_MDC	------>	PHYx_MDC
GMACx_MDIO	<------>	PHYx_MDIO	GMACx_MDIO	<------>	PHYx_MDIO
ETHx_REFCLKO_25M	------>	PHYx OSC	ETHx_REFCLKO_25M	------>	PHYx OSC
GMACx_MCLKINOUT	<------	PHYx_CLKOUT125(Option)	GMACx_MCLKINOUT	<------>	PHYx_TXC
GPIO	------>	PHYx_RSTn	GPIO	------>	PHYx_RSTn
GPIO	<------	PHYx_INT/PMEB	GPIO	<------	PHYx_INT/PMEB

Note:
Camera MCLK can select the following clock:
1:CAM_CLKOUT0
2:CAM_CLKOUT1
3:CIF_CLKOUT
4:REFCLK_OUT(24MHz)

Attention to the voltage matching

Rockchip Confidential

Rockchip 瑞芯微电子	Rockchip Electronics Co., Ltd		
Project:	RK3568_AIoT_REF_SCH		
File:	16.RK3568_VI Interface		
Date:	Tuesday, September 26, 2023	Rev:	V2.0
Designed by: Zhangtz	Reviewed by: Default	Sheet:	17 of 72

RK3568_R(MIPI_DSI_TX0/LVDS_TX0)

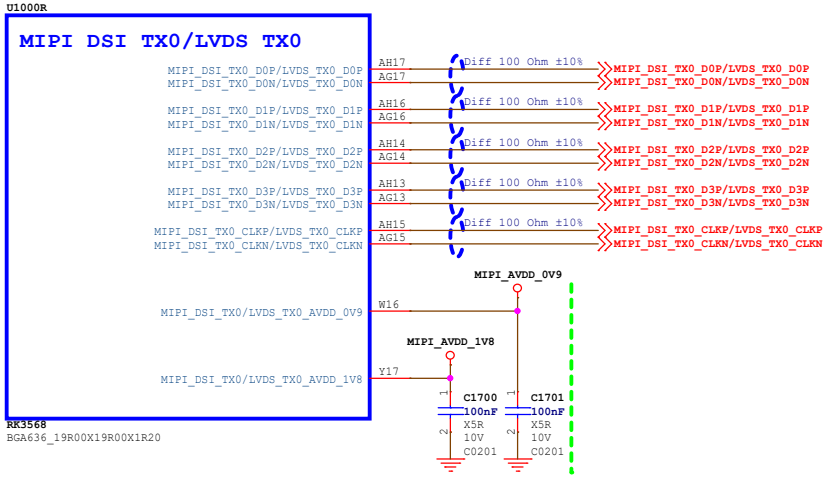

RK3568_S(MIPI_DSI_TX1/LVDS_TX1)

Note:
Add LVDS_TX1 function

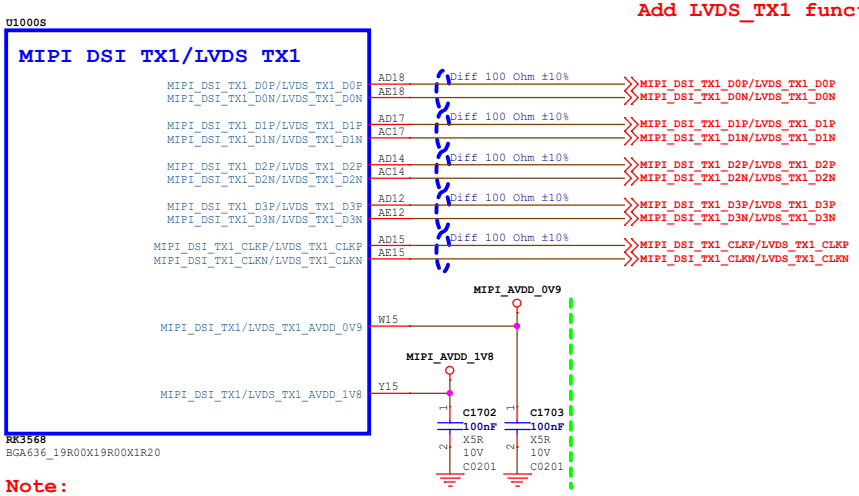

Note:

MIPI_DSI_TX0 + MIPI_DSI_TX1 support dual MIPI DSI TX interface,
Left and Right support redistribution.

LVDS_TX0 + LVDS_TX1 support dual LVDS TX interface,
Left and Right support redistribution

RK3568_T(eDP TX)

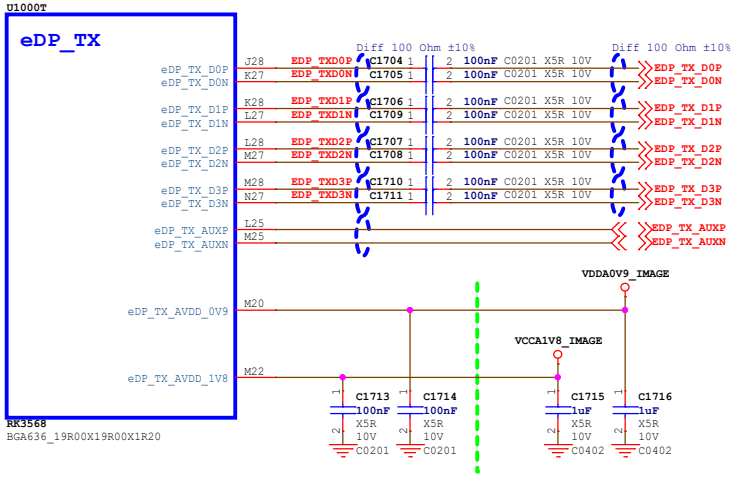

Note:
Caps of between dashed green lines and U1000
should be placed under the U1000 package.
Other caps should be placed close to the U1000 package

RK3568_Q(HDMI2.0 TX)

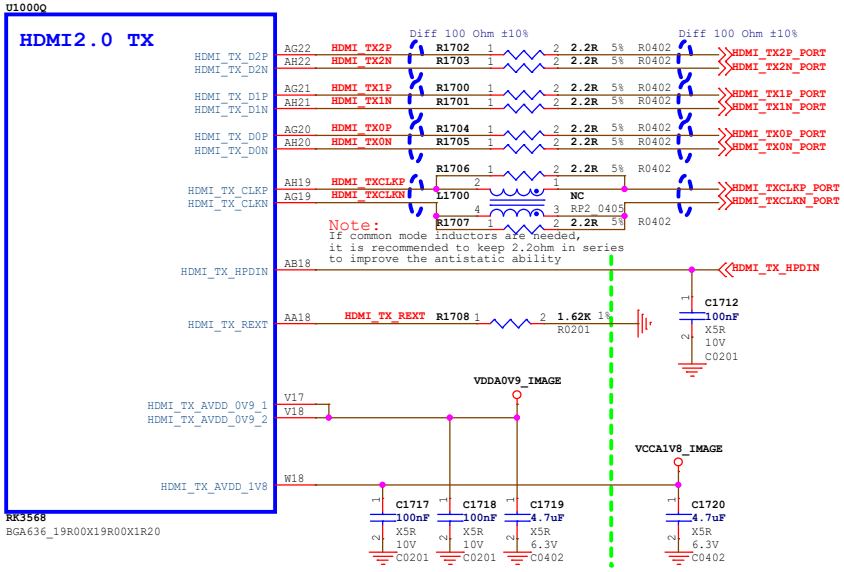

Rockchip 瑞芯微电子	Rockchip Electronics Co., Ltd				
Project:	RK3568_AIoT_REF_SCH				
File:	17.RK3568_VO Interface_1				
Date:	Tuesday, September 26, 2023			Rev:	V2.0
Designed by:	Zhangdz	Reviewed by:	Default	Sheet:	18 of 72

Rockchip Confidential

RK3568_L(VCCIO5 Domain)

U1000L

VCCIO5 Domain

Operating Voltage=1.8V/3.3V

LCDC_D0	VOP_BT656_D0_M0	SPI0_MISO_M1	PCIE20_CLKREQn_M1	I2S1_MCLK_M2	GPIO2_D0_d
LCDC_D1	VOP_BT656_D1_M0	SPI0_MOSI_M1	PCIE20_WAKEn_M1	I2S1_SCLK_TX_M2	GPIO2_D1_d
LCDC_D2	VOP_BT656_D2_M0	SPI0_CS0_M1	PCIE30X1_CLKREQn_M1	I2S1_LRCK_TX_M2	GPIO2_D2_d
LCDC_D3	VOP_BT656_D3_M0	SPI0_CLK_M1	PCIE30X1_WAKEn_M1	I2S1_SDI0_M2	GPIO2_D3_d
LCDC_D4	VOP_BT656_D4_M0	SPI2_CS1_M1	PCIE30X2_CLKREQn_M1	I2S1_SDI1_M2	GPIO2_D4_d
LCDC_D5	VOP_BT656_D5_M0	SPI2_CS0_M1	PCIE30X2_WAKEn_M1	I2S1_SDI2_M2	GPIO2_D5_d
LCDC_D6	VOP_BT656_D6_M0	SPI2_MOSI_M1	PCIE30X2_PERSTn_M1	I2S1_SDI3_M2	GPIO2_D6_d
LCDC_D7	VOP_BT656_D7_M0	SPI2_MISO_M1	UART8_TX_M1	I2S1_SDO0_M2	GPIO2_D7_d
LCDC_CLK	VOP_BT656_CLK_M0	SPI2_CLK_M1	UART8_RX_M1	I2S1_SDO1_M2	GPIO3_A0_d
LCDC_D8	VOP_BT1120_D0	SPI1_CS0_M1	PCIE30X1_PERSTn_M1	SDMMC2_D0_M1	GPIO3_A1_d
LCDC_D9	VOP_BT1120_D1	GMAC1_TXD2_M0	I2S3_MCLK_M0	SDMMC2_D1_M1	GPIO3_A2_d
LCDC_D10	VOP_BT1120_D2	GMAC1_TXD3_M0	I2S3_SCLK_M0	SDMMC2_D2_M1	GPIO3_A3_d
LCDC_D11	VOP_BT1120_D3	GMAC1_RXD2_M0	I2S3_LRCK_M0	SDMMC2_D3_M1	GPIO3_A4_d
LCDC_D12	VOP_BT1120_D4	GMAC1_RXD3_M0	I2S3_SDO_M0	SDMMC2_CMD_M1	GPIO3_A5_d
LCDC_D13	VOP_BT1120_CLK	GMAC1_TXCLK_M0	I2S3_SDI_M0	SDMMC2_CLK_M1	GPIO3_A6_d
LCDC_D14	VOP_BT1120_D5	GMAC1_RXCLK_M0		SDMMC2_DET_M1	GPIO3_A7_d
LCDC_D15	VOP_BT1120_D6	ETH1_REFCLKO_25M_M0		SDMMC2_PWREN_M1	GPIO3_B0_d
LCDC_D16	VOP_BT1120_D7	GMAC1_RXD0_M0	UART4_RX_M1	PWM8_M0	GPIO3_B1_d
LCDC_D17	VOP_BT1120_D8	GMAC1_RXD1_M0	UART4_TX_M1	PWM9_M0	GPIO3_B2_d
LCDC_D18	VOP_BT1120_D9	GMAC1_RXDV_CRS_M0	I2C5_SCL_M0	PDM_SDI0_M2	GPIO3_B3_d
LCDC_D19	VOP_BT1120_D10	GMAC1_RXER_M0	I2C5_SDA_M0	PDM_SDI1_M2	GPIO3_B4_d
LCDC_D20	VOP_BT1120_D11	GMAC1_TXD0_M0	I2C3_SCL_M1	PWM10_M0	GPIO3_B5_d
LCDC_D21	VOP_BT1120_D12	GMAC1_TXD1_M0	I2C3_SDA_M1	PWM11_IR_M0	GPIO3_B6_d
LCDC_D22	PWM12_M0	GMAC1_TXEN_M0	UART3_TX_M1	PDM_SDI2_M2	GPIO3_B7_d
LCDC_D23	PWM13_M0	GMAC1_MCLKINOUT_M0	UART3_RX_M1	PDM_SDI3_M2	GPIO3_C0_d
LCDC_HSYNC	VOP_BT1120_D13	SPI1_MOSI_M1	PCIE20_PERSTn_M1	I2S1_SDO2_M2	GPIO3_C1_d
LCDC_VSYNC	VOP_BT1120_D14	SPI1_MISO_M1	UART5_TX_M1	I2S1_SDO3_M2	GPIO3_C2_d
LCDC_DEN	VOP_BT1120_D15	SPI1_CLK_M1	UART5_RX_M1	I2S1_SCLK_RX_M2	GPIO3_C3_d
PWM14_M0	VOP_PWM_M1	GMAC1_MDC_M0	UART7_TX_M1	PDM_CLK1_M2	GPIO3_C4_d
PWM15_IR_M0	SPDIF_TX_M1	GMAC1_MDIO_M0	UART7_RX_M1	I2S1_LRCK_RX_M2	GPIO3_C5_d

VCCIO5_1 V10
VCCIO5_2 V11

RK3568
BGA636_19R00X19R00X1R20

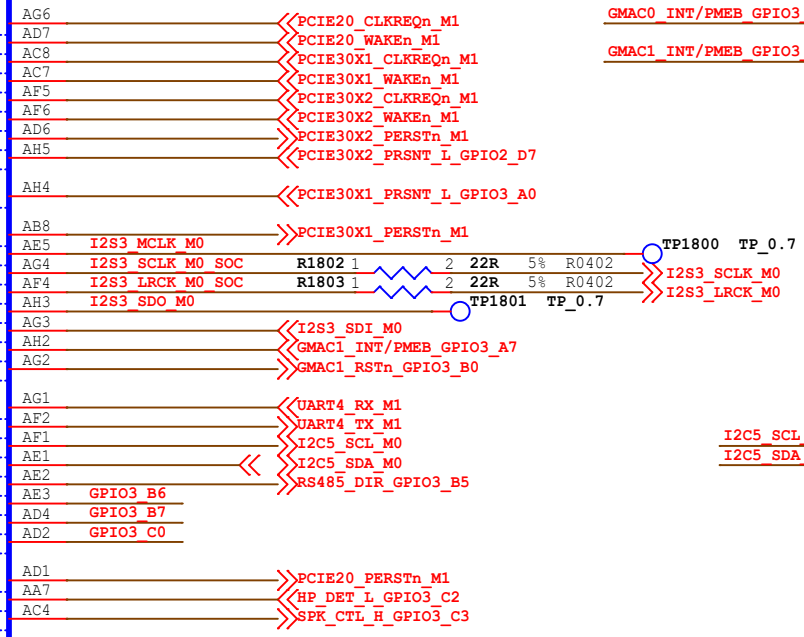

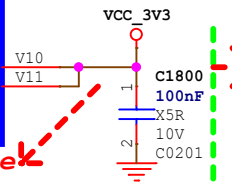

If a board needs to be compatible with two voltage choices, recommended to enable BOM_ID

Note:

If VCCIO5 domain power voltage is adjusted, the software DTS configuration must be updated synchronously, otherwise the IO may be damaged!

If the VCCIO5 hardware has been modified to 1.8V power supply, and the corresponding DTS must be modified to 1.8V configuration, otherwise the IO function of VCCIO5 will be abnormally.

The VCCIO5 hardware has been modified to 3.3V power supply, if the software DTS configuration is still 1.8V configuration, the IO of VCCIO5 will be damaged!

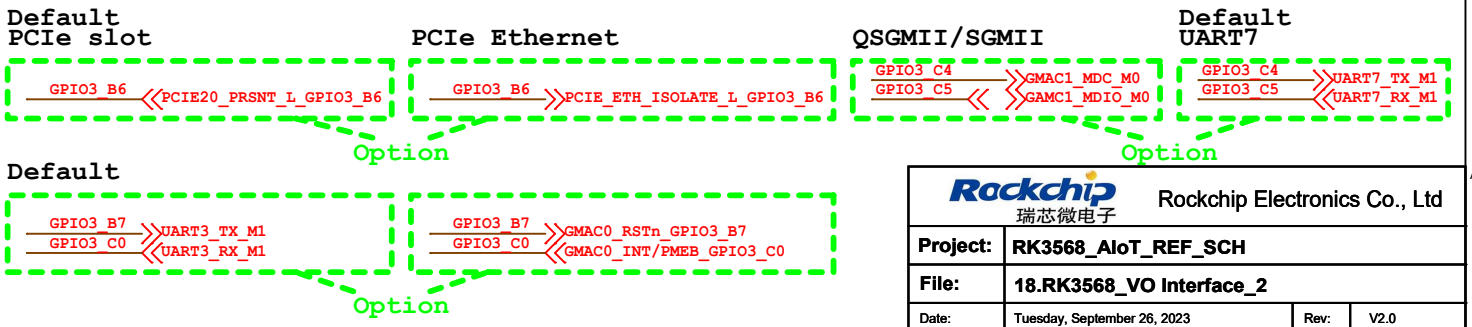

Note:

Caps of between dashed green lines and U1000 should be placed under the U1000 package

Rockchip Confidential

Rockchip 瑞芯微电子	Rockchip Electronics Co., Ltd				
Project:	RK3568_AIoT_REF_SCH				
File:	18.RK3568_VO Interface_2				
Date:	Tuesday, September 26, 2023			Rev:	V2.0
Designed by:	Zhangdz	Reviewed by:	Default	Sheet:	19 of 72

RK3568_H(VCCIO1 Domain)

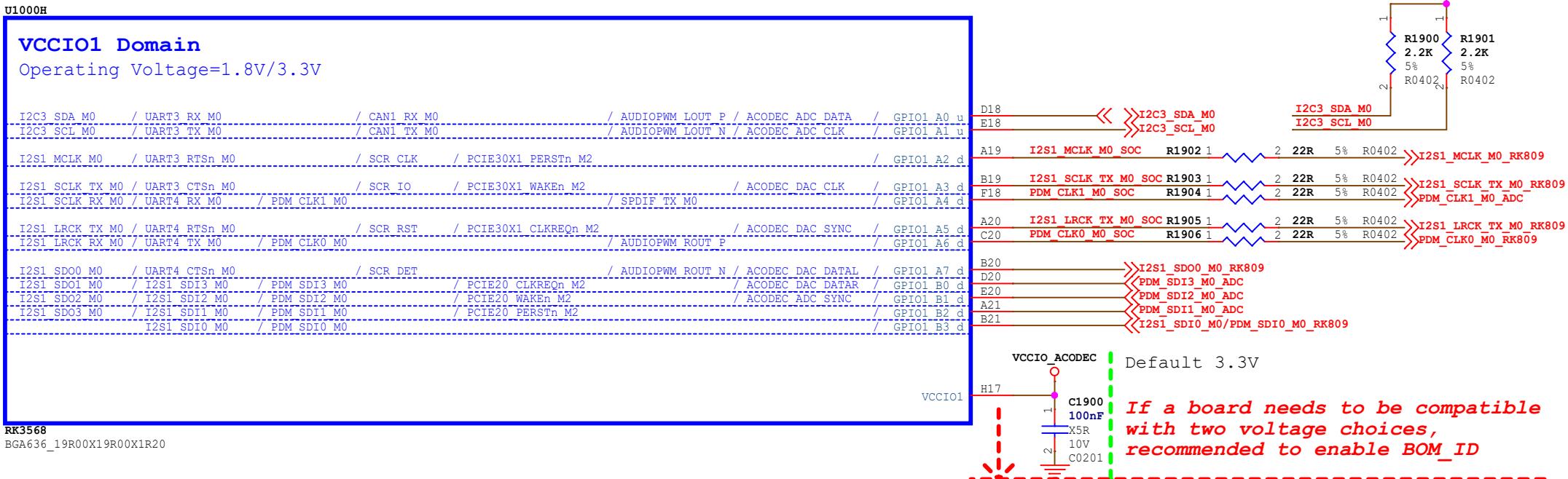

Note:

If VCCIO1 domain power voltage is adjusted, the software DTS configuration must be updated synchronously, otherwise the IO may be damaged!

If the VCCIO1 hardware has been modified to 1.8V power supply, and the corresponding DTS must be modified to 1.8V configuration, otherwise the IO function of VCCIO1 will be abnormally.

The VCCIO1 hardware has been modified to 3.3V power supply, if the software DTS configuration is still 1.8V configuration, the IO of VCCIO1 will be damaged!

Note:

Caps of between dashed green lines and U1000 should be placed under the U1000 package

Rockchip Confidential

Rockchip 瑞芯微电子	Rockchip Electronics Co., Ltd				
Project:	RK3568_AIoT_REF_SCH				
File:	19.RK3568_Audio Interface				
Date:	Tuesday, September 26, 2023			Rev:	V2.0
Designed by:	Zhangdz	Reviewed by:	Default	Sheet:	20 of 72

12V/3A DCIN

Note:
With SATA,PCIe, the current is estimated according to the actual number of SATA,PCIe

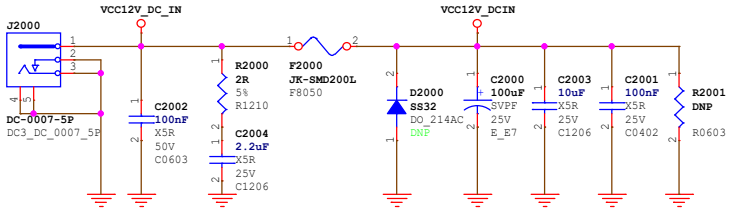

VCC3V3_SYS

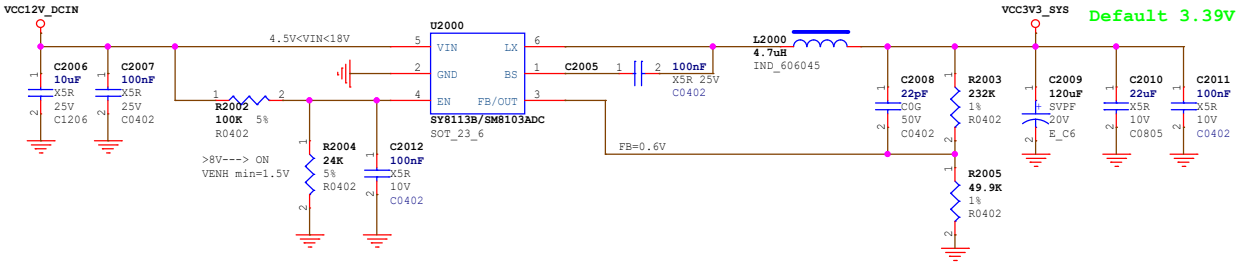

VCC5V0_SYS

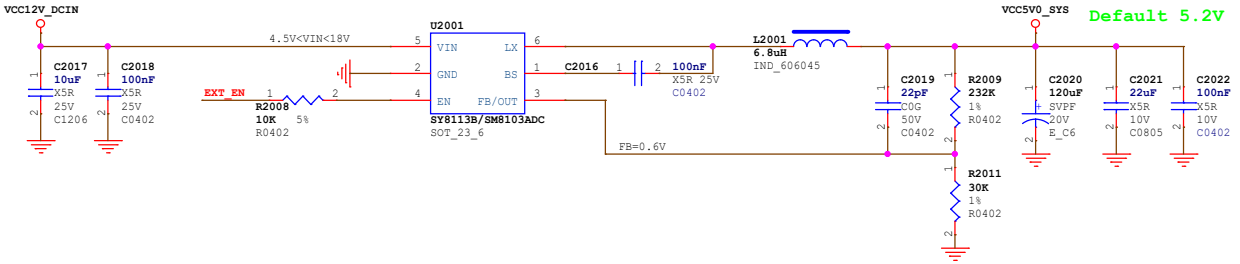

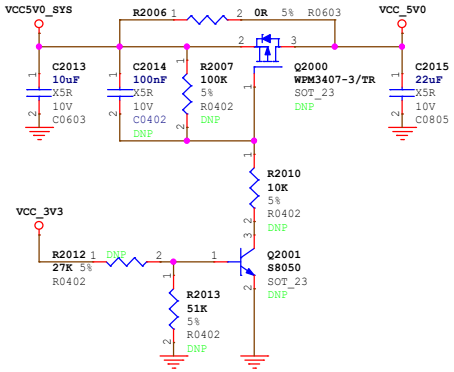

VCC5V0_USB

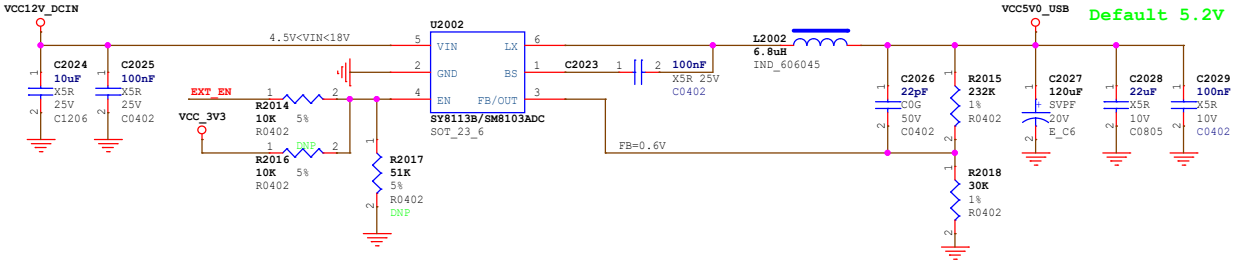

EXT_EN

Rockchip Confidential

Rockchip 瑞芯微电子	Rockchip Electronics Co., Ltd				
Project:	RK3568_AIoT_REF_SCH				
File:	20.Power_DC IN				
Date:	Tuesday, September 26, 2023			Rev:	V2.0
Designed by:	Zhangdz	Reviewed by:	Default	Sheet:	21 of 72

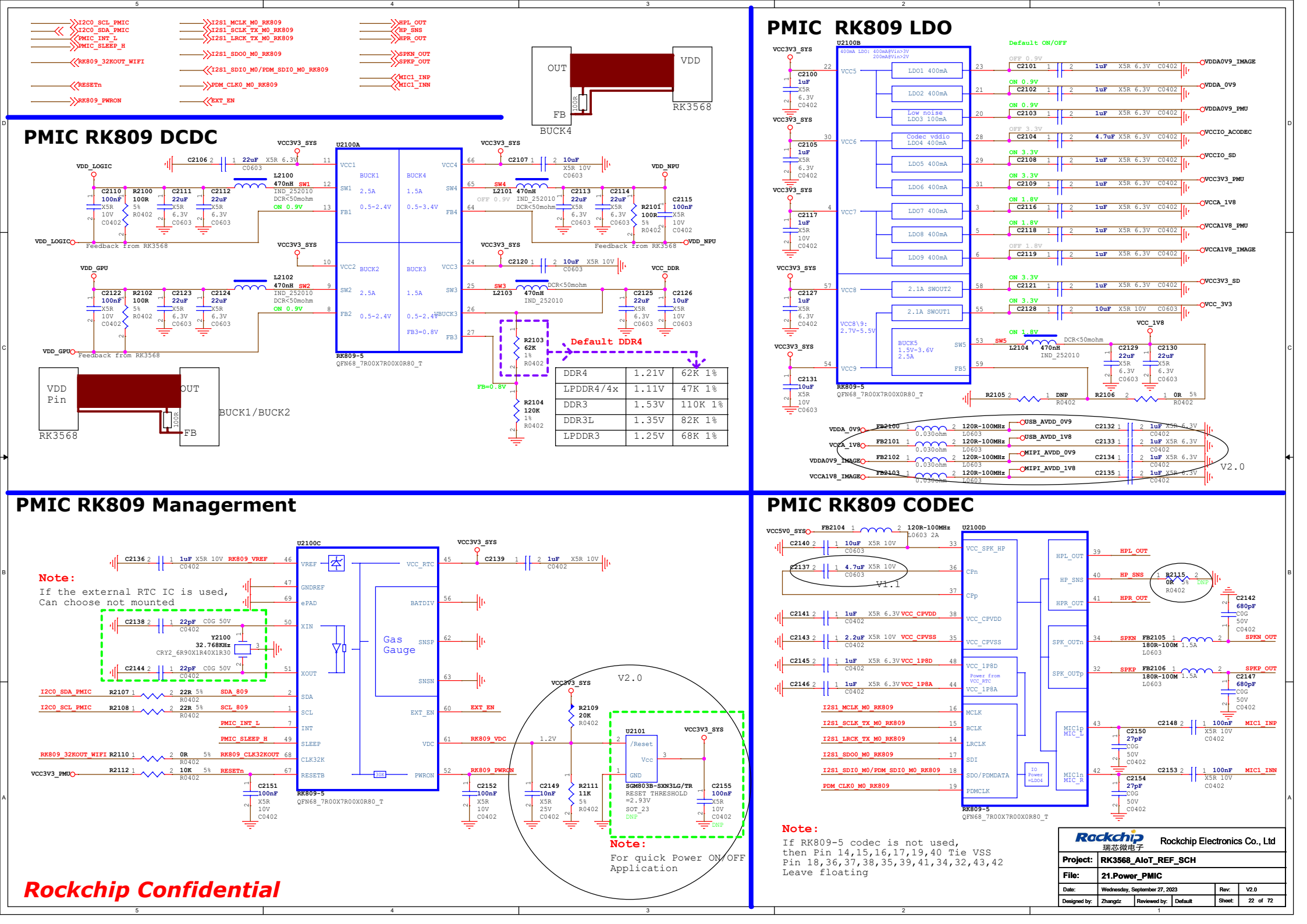
PMIC RK809 DCDC
PMIC RK809 LDO
PMIC RK809 Managerment
PMIC RK809 CODEC
Default DDR4
Note:
If the external RTC IC is used,
Can choose not mounted
Note:
For quick Power ON/OFF
Application
Note:
If RK809-5 codec is not used,
then Pin 14,15,16,17,19,40 Tie VSS
Pin 18,36,37,38,35,39,41,34,32,43,42
Leave floating
Rockchip Confidential
Rockchip Electronics Co., Ltd
Project: RK3568_AIoT_REF_SCH
File: 21.Power_PMIC
Date: Wednesday, September 27, 2023
Rev: V2.0
Designed by: Zhangdz
Reviewed by: Default
Sheet: 22 of 72

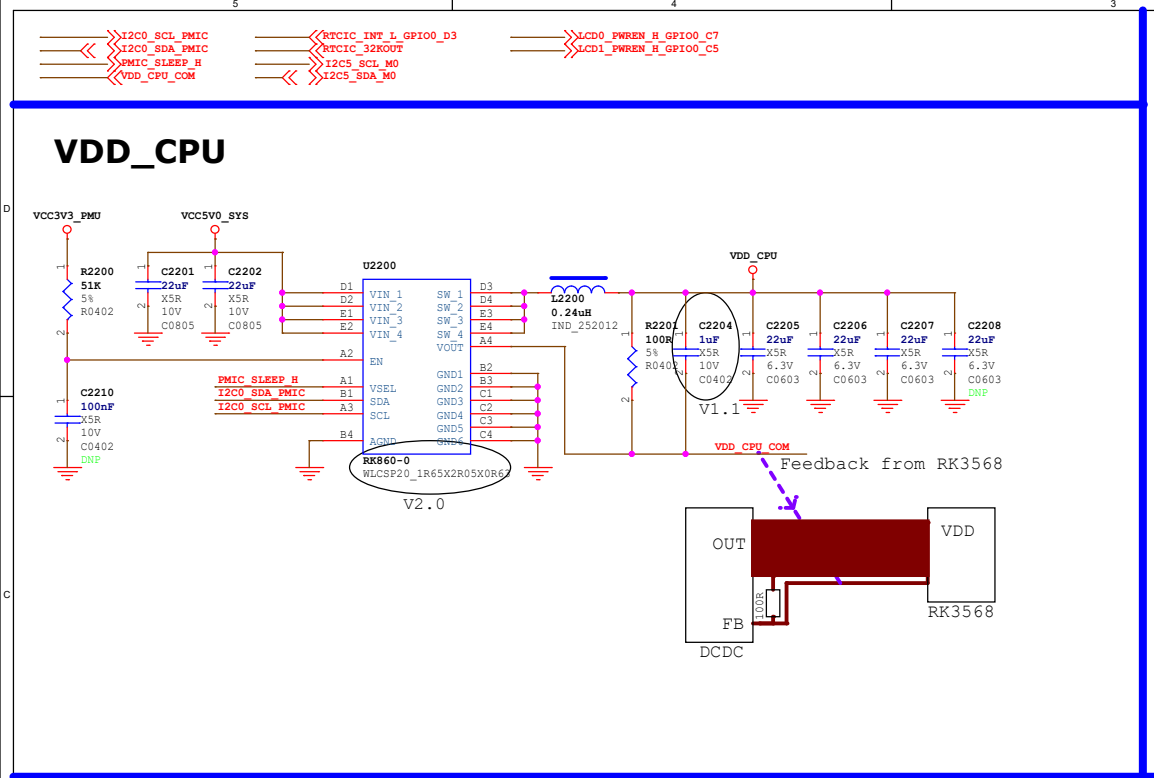

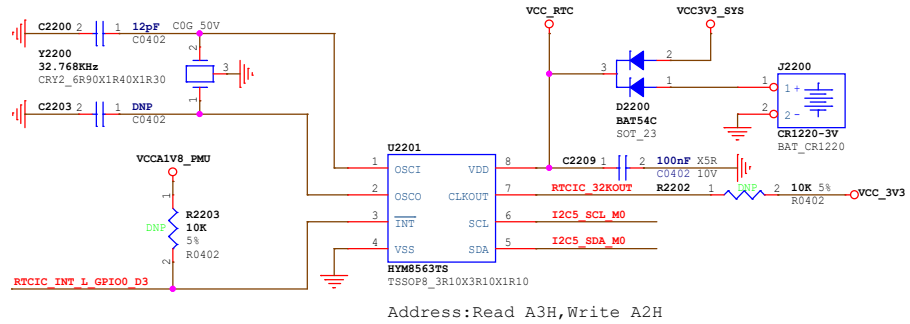

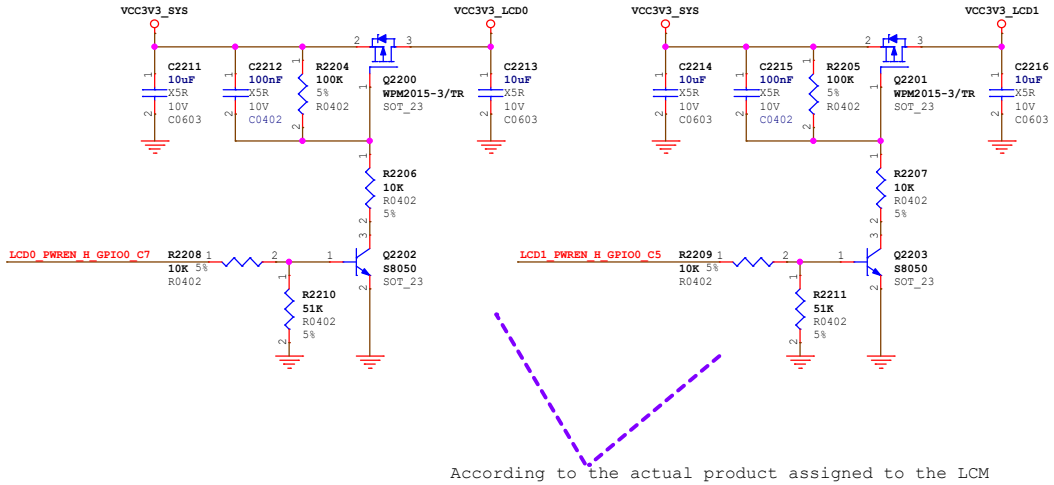

VDD_CPU

RTC IC --Option

Note:

The power off hold time scheme is required,
It is recommended to use external RTC IC

But, it will not support the timing poweron function

Rockchip Confidential

Rockchip 瑞芯微电子	Rockchip Electronics Co., Ltd		
Project:	RK3568_AIoT_REF_SCH		
File:	22.Power_Ext Discrete/RTC IC		
Date:	Tuesday, September 26, 2023	Rev:	V2.0
Designed by: Zhangdz	Reviewed by: Default	Sheet:	23 of 72

FLASH_VOL_SEL

Flash Power Manage

	VCCIO2 domain voltage: Recommend voltage value (VCCIO_FLASH)	FLASH_VOL_SEL state decided to VCCIO2 domain IO driven by default
eMMC	1.8V	FLASH_VOL_SEL --> Logic=H
Nand flash	Default 3.3V, Optional 1.8V	FLASH_VOL_SEL --> Logic=L(Default)
SPI flash	Default 1.8V, Optional 3.3V	FLASH_VOL_SEL --> Logic=H(Default)

Note:

According to the actual choice of mounted
Cannot be mounted at the same time

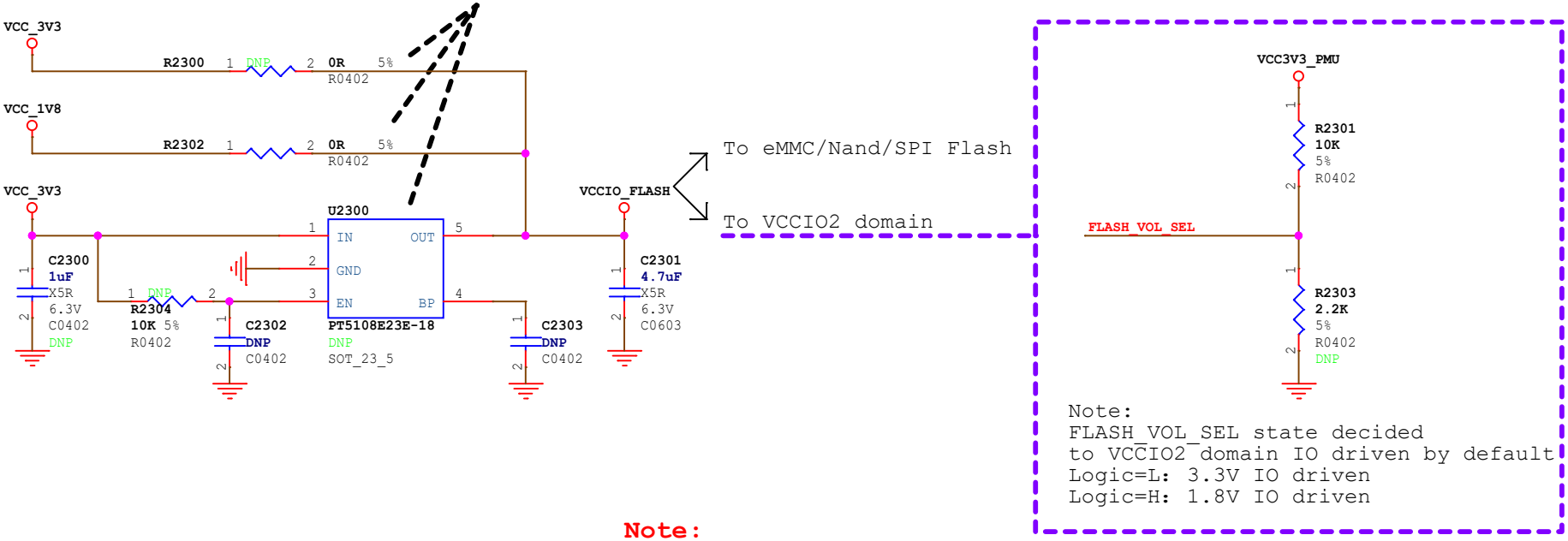

Note:

When VCCIO2 voltage is connected to 1.8V, FLASH_VOL_SEL must be high
When VCCIO2 voltage is connected to 3.3V, FLASH_VOL_SEL must be low
If VCCIO2 power supply voltage and FLASH_VOL_SEL fails to meet the above relationship,
its function will be abnormally(for example, it cannot be started normally) or IO will be damaged.

Rockchip Confidential

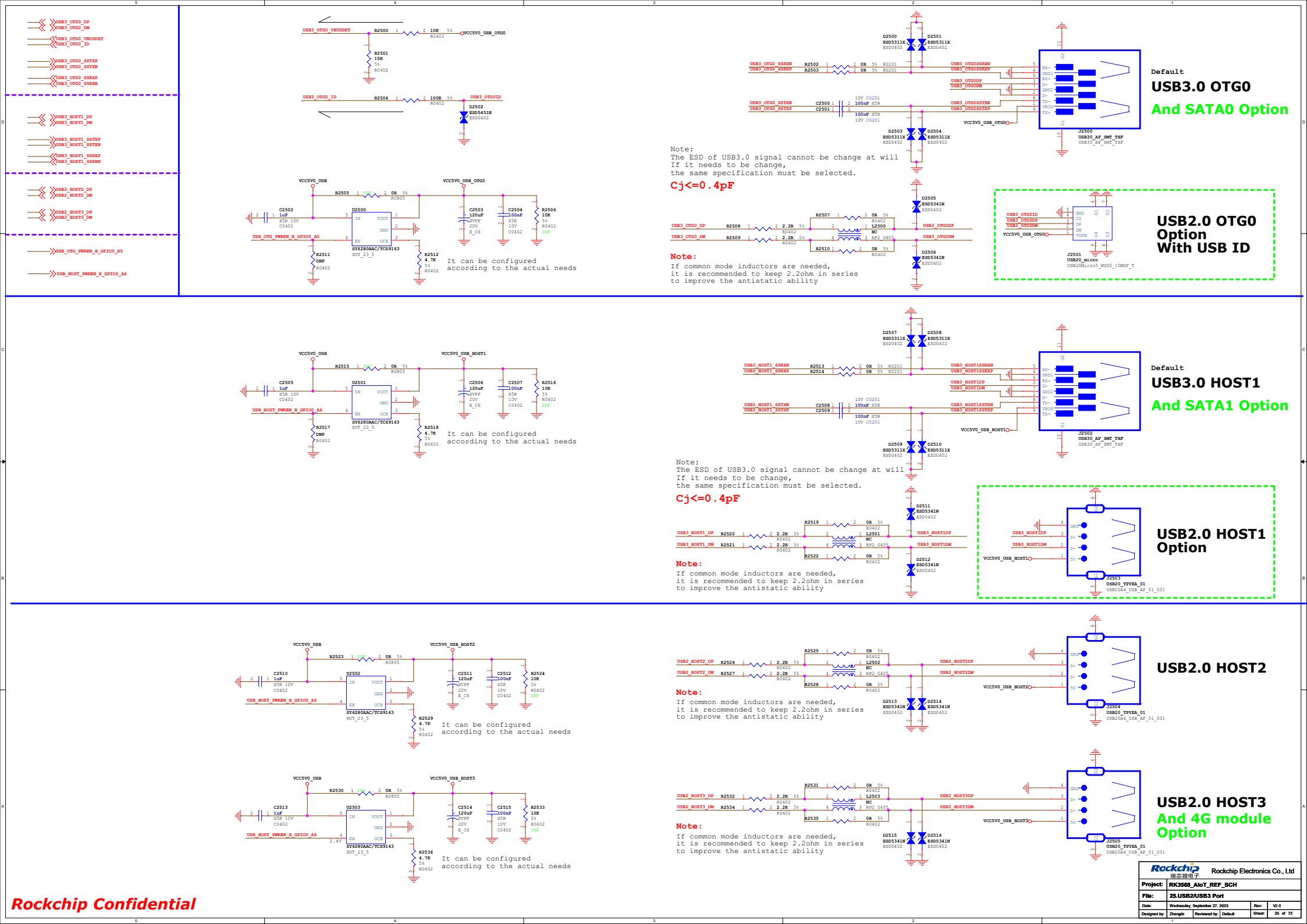
USB3_OTG0_DP
USB3_OTG0_DM
USB3_OTG0_VBUSDET
USB3_OTG0_ID
USB3_OTG0_SSTXP
USB3_OTG0_SSTXN
USB3_OTG0_SSRXP
USB3_OTG0_SSRXN
USB3_HOST1_DP
USB3_HOST1_DM
USB3_HOST1_SSTXP
USB3_HOST1_SSTXN
USB3_HOST1_SSRXP
USB3_HOST1_SSRXN
USB2_HOST2_DP
USB2_HOST2_DM
USB2_HOST3_DP
USB2_HOST3_DM
USB_OTG_PWREN_H_GPIO0_A5
USB_HOST_PWREN_H_GPIO0_A6
R2500 10K 5% R0402
VCC5V0_USB_OTG0
R2501 15K 5% R0402
R2504 100R 5% R0402
USB3_OTG0ID
D2502 ESD5451N ESD0402
VCC5V0_USB
R2505 DNP 0R 5% R0805
VCC5V0_USB_OTG0
C2502 1uF X5R 10V C0402
U2500 SY6280AAC/TCS9163 SOT_23_5
IN VOUT GND EN OCB
C2503 120uF SVPF 20V E_C6
C2504 100nF X5R 10V C0402
R2506 10K 5% R0402 DNP
R2511 DNP R0402
R2512 4.7K 5% R0402
It can be configured according to the actual needs
D2500 ESD5311X ESD0402
D2501 ESD5311X ESD0402
USB3_OTG0_SSRXN R2502 0R 5% R0201
USB3_OTG0_SSRXP R2503 0R 5% R0201
USB3_OTG0SSRXN
USB3_OTG0SSRXP
USB3_OTG0DP
USB3_OTG0DM
USB3_OTG0_SSTXN C2500 100nF X5R 10V C0201
USB3_OTG0_SSTXP C2501 100nF X5R 10V C0201
USB3_OTG0SSTXN
USB3_OTG0SSTXP
D2503 ESD5311X ESD0402
D2504 ESD5311X ESD0402
J2500 USB30_AF_SMT_THF USB30_AF_SMT_THF
Default
USB3.0 OTG0
And SATA0 Option
Note:
The ESD of USB3.0 signal cannot be change at will
If it needs to be change,
the same specification must be selected.
Cj<=0.4pF
D2505 ESD5341N ESD0402
USB3_OTG0_DP R2508 2.2R 5% R0402
USB3_OTG0_DM R2509 2.2R 5% R0402
R2507 0R 5% R0402
L2500 NC RP2_0405
R2510 0R 5% R0402
USB3_OTG0DP
USB3_OTG0DM
D2506 ESD5341N ESD0402
Note:
If common mode inductors are needed,
it is recommended to keep 2.2ohm in series
to improve the antistatic ability
USB3_OTG0ID
USB3_OTG0DP
USB3_OTG0DM
VCC5V0_USB_OTG0
GND ID DP DM VUSB
J2501 USB20_micro USB20Micro5_MU05_10MGF_T
USB2.0 OTG0 Option
With USB ID
VCC5V0_USB
R2515 DNP 0R 5% R0805
VCC5V0_USB_HOST1
C2505 1uF X5R 10V C0402
U2501 SY6280AAC/TCS9163 SOT_23_5
C2506 120uF SVPF 20V E_C6
C2507 100nF X5R 10V C0402
R2516 10K 5% R0402 DNP
R2517 DNP R0402
R2518 4.7K 5% R0402
It can be configured according to the actual needs
D2507 ESD5311X ESD0402
D2508 ESD5311X ESD0402
USB3_HOST1_SSRXN R2513 0R 5% R0201
USB3_HOST1_SSRXP R2514 0R 5% R0201
USB3_HOST1SSRXN
USB3_HOST1SSRXP
USB3_HOST1DP
USB3_HOST1DM
USB3_HOST1_SSTXN C2508 100nF X5R 10V C0201
USB3_HOST1_SSTXP C2509 100nF X5R 10V C0201
USB3_HOST1SSTXN
USB3_HOST1SSTXP
VCC5V0_USB_HOST1
D2509 ESD5311X ESD0402
D2510 ESD5311X ESD0402
J2502 USB30_AF_SMT_THF USB30_AF_SMT_THF
Default
USB3.0 HOST1
And SATA1 Option
Note:
The ESD of USB3.0 signal cannot be change at will
If it needs to be change,
the same specification must be selected.
Cj<=0.4pF
D2511 ESD5341N ESD0402
USB3_HOST1_DP R2520 2.2R 5% R0402
USB3_HOST1_DM R2521 2.2R 5% R0402
R2519 0R 5% R0402
L2501 NC RP2_0405
R2522 0R 5% R0402
USB3_HOST1DP
USB3_HOST1DM
D2512 ESD5341N ESD0402
Note:
If common mode inductors are needed,
it is recommended to keep 2.2ohm in series
to improve the antistatic ability
GND D+ D- 5V
VCC5V0_USB_HOST1
J2503 USB20_TPYEA_01 USB20A4_USB_AF_01_001
USB2.0 HOST1 Option
VCC5V0_USB
R2523 DNP 0R 5% R0805
VCC5V0_USB_HOST2
C2510 1uF X5R 10V C0402
U2502 SY6280AAC/TCS9163 SOT_23_5
C2511 120uF SVPF 20V E_C6
C2512 100nF X5R 10V C0402
R2524 10K 5% R0402 DNP
R2529 4.7K 5% R0402
It can be configured according to the actual needs
USB2_HOST2_DP R2526 2.2R 5% R0402
USB2_HOST2_DM R2527 2.2R 5% R0402
R2525 0R 5% R0402
L2502 NC RP2_0405
R2528 0R 5% R0402
USB2_HOST2DP
USB2_HOST2DM
D2513 ESD5341N ESD0402
D2514 ESD5341N ESD0402
VCC5V0_USB_HOST2
J2504 USB20_TPYEA_01 USB20A4_USB_AF_01_001
USB2.0 HOST2
Note:
If common mode inductors are needed,
it is recommended to keep 2.2ohm in series
to improve the antistatic ability
VCC5V0_USB
R2530 DNP 0R 5% R0805
VCC5V0_USB_HOST3
C2513 1uF X5R 10V C0402
U2503 SY6280AAC/TCS9163 SOT_23_5
C2514 120uF SVPF 20V E_C6
C2515 100nF X5R 10V C0402
R2533 10K 5% R0402 DNP
R2536 4.7K 5% R0402
It can be configured according to the actual needs
USB2_HOST3_DP R2532 2.2R 5% R0402
USB2_HOST3_DM R2534 2.2R 5% R0402
R2531 0R 5% R0402
L2503 NC RP2_0405
R2535 0R 5% R0402
USB2_HOST3DP
USB2_HOST3DM
D2515 ESD5341N ESD0402
D2516 ESD5341N ESD0402
VCC5V0_USB_HOST3
J2505 USB20_TPYEA_01 USB20A4_USB_AF_01_001
USB2.0 HOST3
And 4G module Option
Note:
If common mode inductors are needed,
it is recommended to keep 2.2ohm in series
to improve the antistatic ability
Rockchip Confidential
Rockchip Electronics Co., Ltd
Project: RK3568_AIoT_REF_SCH
File: 25.USB2/USB3 Port
Date: Wednesday, September 27, 2023
Rev: V2.0
Designed by: Zhangtz
Reviewed by: Default
Sheet: 25 of 72

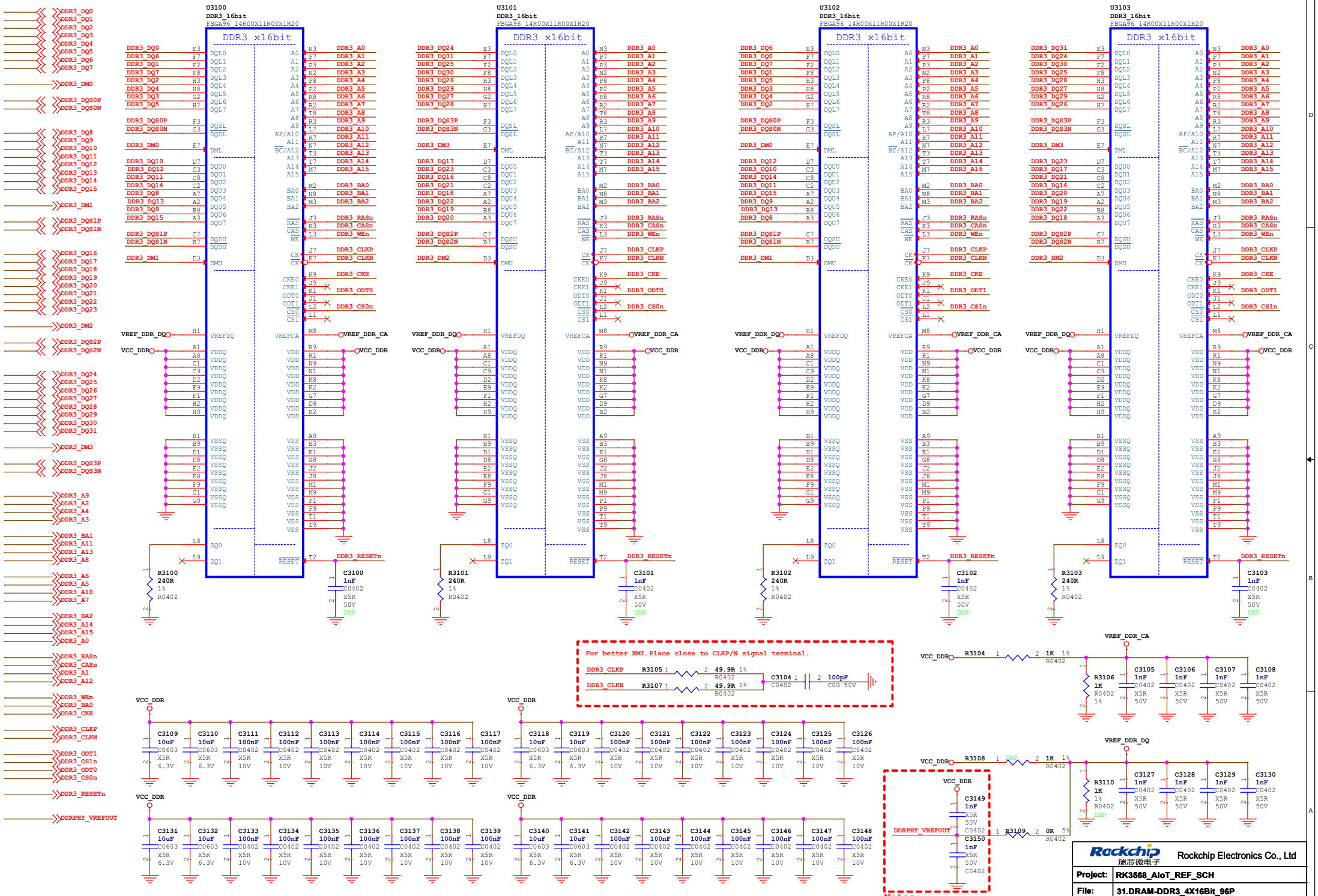
U3100
DDR3_16bit
FBGA96 14R00X11R00X1R20
U3101
DDR3_16bit
FBGA96 14R00X11R00X1R20
U3102
DDR3_16bit
FBGA96 14R00X11R00X1R20
U3103
DDR3_16bit
FBGA96 14R00X11R00X1R20
DDR3 x16bit
For better EMI.Place close to CLKP/N signal terminal.
DDR3_CLKP
DDR3_CLKN
R3105 49.9R 1% R0402
R3107 49.9R 1% R0402
C3104 100pF C0G 50V
VCC_DDR
R3104 1K 1% R0402
VREF_DDR_CA
R3106 1K 1% R0402
C3105 1nF C0402 X5R 50V
C3106 1nF C0402 X5R 50V
C3107 1nF C0402 X5R 50V
C3108 1nF C0402 X5R 50V
R3108 1K 1% R0402
VREF_DDR_DQ
R3110 1K 1% R0402
C3127 1nF C0402 X5R 50V
C3128 1nF C0402 X5R 50V
C3129 1nF C0402 X5R 50V
C3130 1nF C0402 X5R 50V
DDRPHY_VREFOUT
R3109 0R 5% R0402
C3149 1nF X5R 50V C0402
C3150 1nF X5R 50V C0402
Notes:
Close to SOC
Rockchip Confidential
Rockchip Electronics Co., Ltd
Project: RK3568_AIoT_REF_SCH
File: 31.DRAM-DDR3_4X16Bit_96P
Date: Tuesday, September 26, 2023
Rev: V2.0
Designed by: Zhangdz
Reviewed by: Default
Sheet: 26 of 72

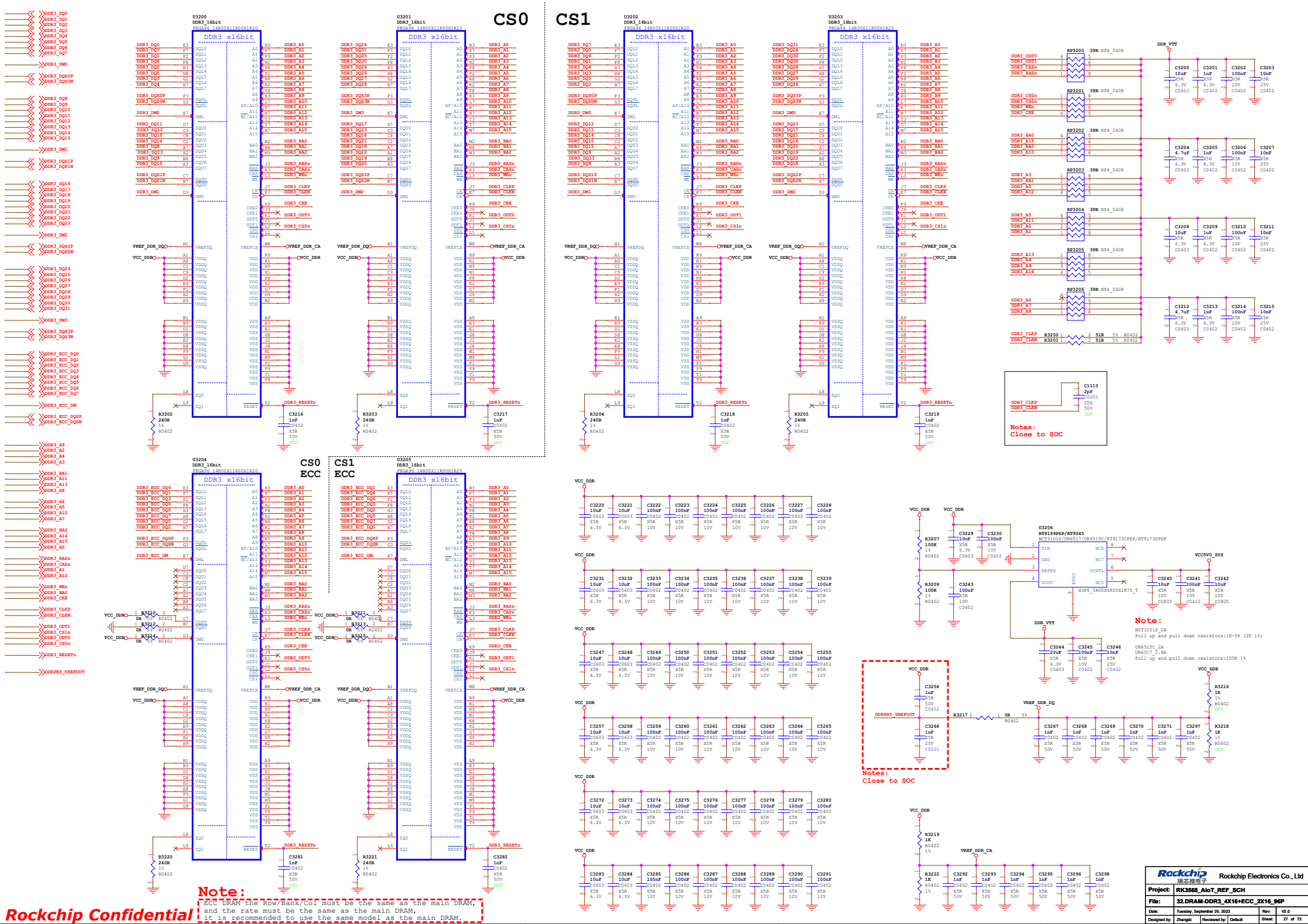
CS0
CS1
CS0 ECC
CS1 ECC
U3200 DDR3_16bit FBGA96 14800X11800X1820
U3201 DDR3_16bit FBGA96 14800X11800X1820
U3202 DDR3_16bit FBGA96 14800X11800X1820
U3203 DDR3_16bit FBGA96 14800X11800X1820
U3204 DDR3_16bit FBGA96 14800X11800X1820
U3205 DDR3_16bit FBGA96 14800X11800X1820
DDR3 x16bit
U3206 RT9199PSP/RT9045 NCT3101S/UR6517/UR6515C/RT9173CPSP/RT9173DPSP
Notes: Close to SOC
Note: NCT3101S_2A Pull up and pull down resistors:1K-5K (2K 1%)
UR6515C_2A UR6517_1.8A Pull up and pull down resistors:100K 1%
Note: ECC DRAM the Row/Bank/Col must be the same as the main DRAM, and the rate must be the same as the main DRAM, it is recommended to use the same model as the main DRAM.
Rockchip Confidential
Rockchip Electronics Co., Ltd
Project: RK3568_AIoT_REF_SCH
File: 32.DRAM-DDR3_4X16+ECC_2X16_96P
Date: Tuesday, September 26, 2023
Rev: V2.0
Designed by: Zhangtz
Reviewed by: Default
Sheet: 27 of 72

DDR4P216SD6

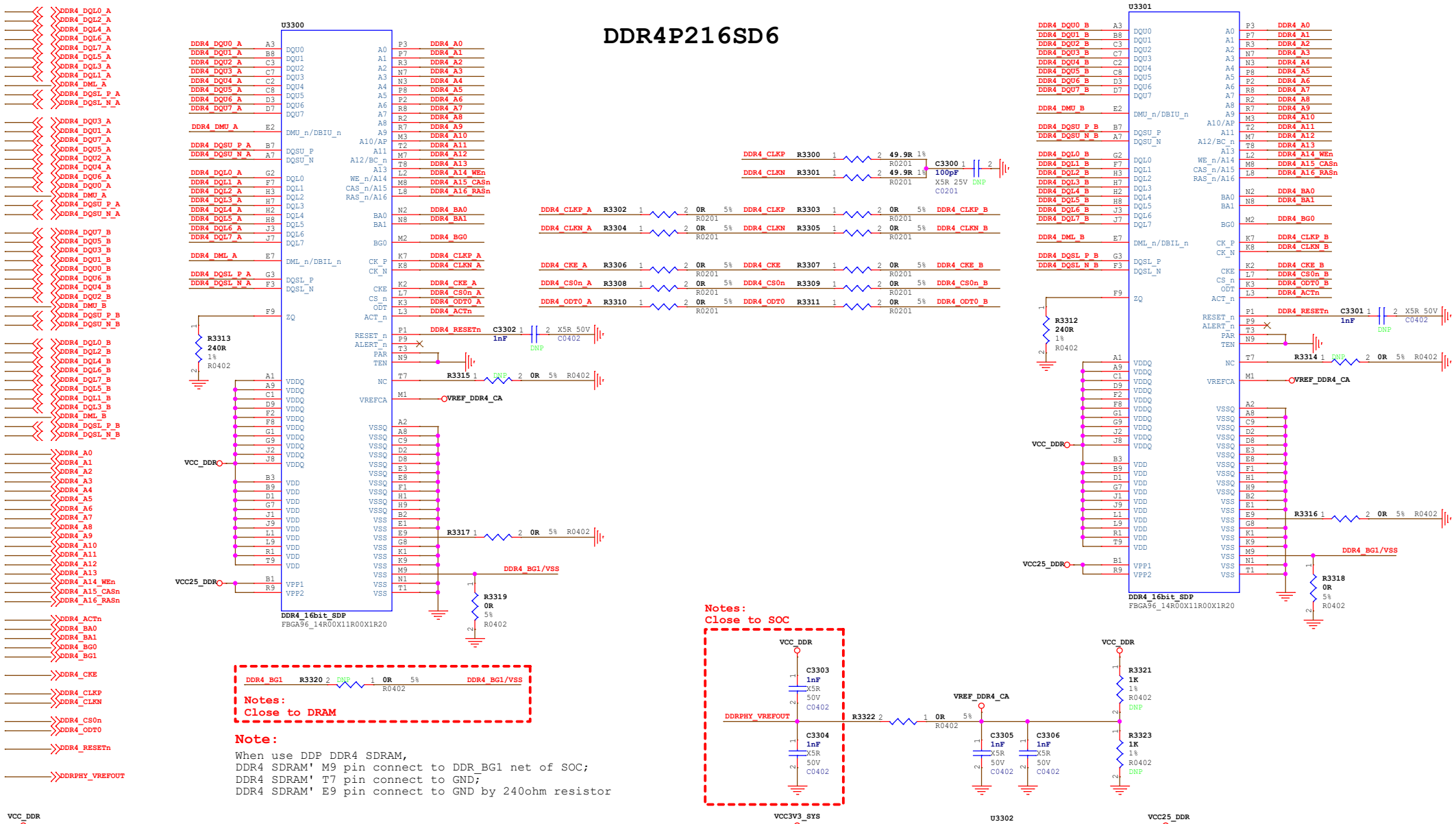

Notes:
Close to DRAM

DDR4_BG1 R3320 2 DNP 1 0R 5% R0402 DDR4_BG1/VSS

Notes:
Close to SOC

Note:

When use DDP DDR4 SDRAM,
DDR4 SDRAM' M9 pin connect to DDR_BG1 net of SOC;
DDR4 SDRAM' T7 pin connect to GND;
DDR4 SDRAM' E9 pin connect to GND by 240ohm resistor

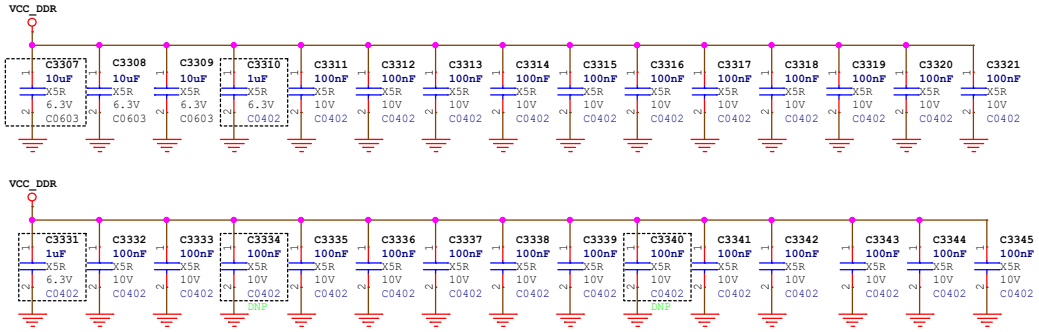

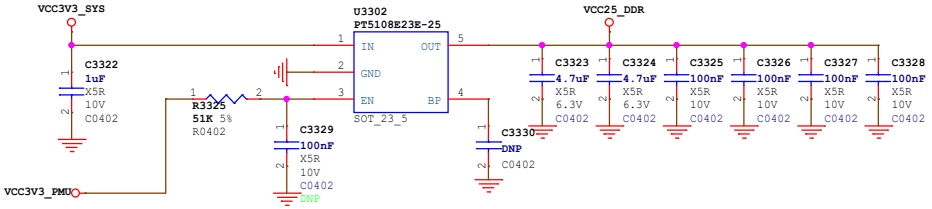

Rockchip Confidential

Rockchip 瑞芯微电子	Rockchip Electronics Co., Ltd		
Project:	RK3568_AIoT_REF_SCH		
File:	33.DRAM-DDR4_2x16bit_96P		
Date:	Tuesday, September 26, 2023	Rev:	V2.0
Designed by: Zhangdz	Reviewed by: Default	Sheet:	28 of 72

DDR4P416DD6

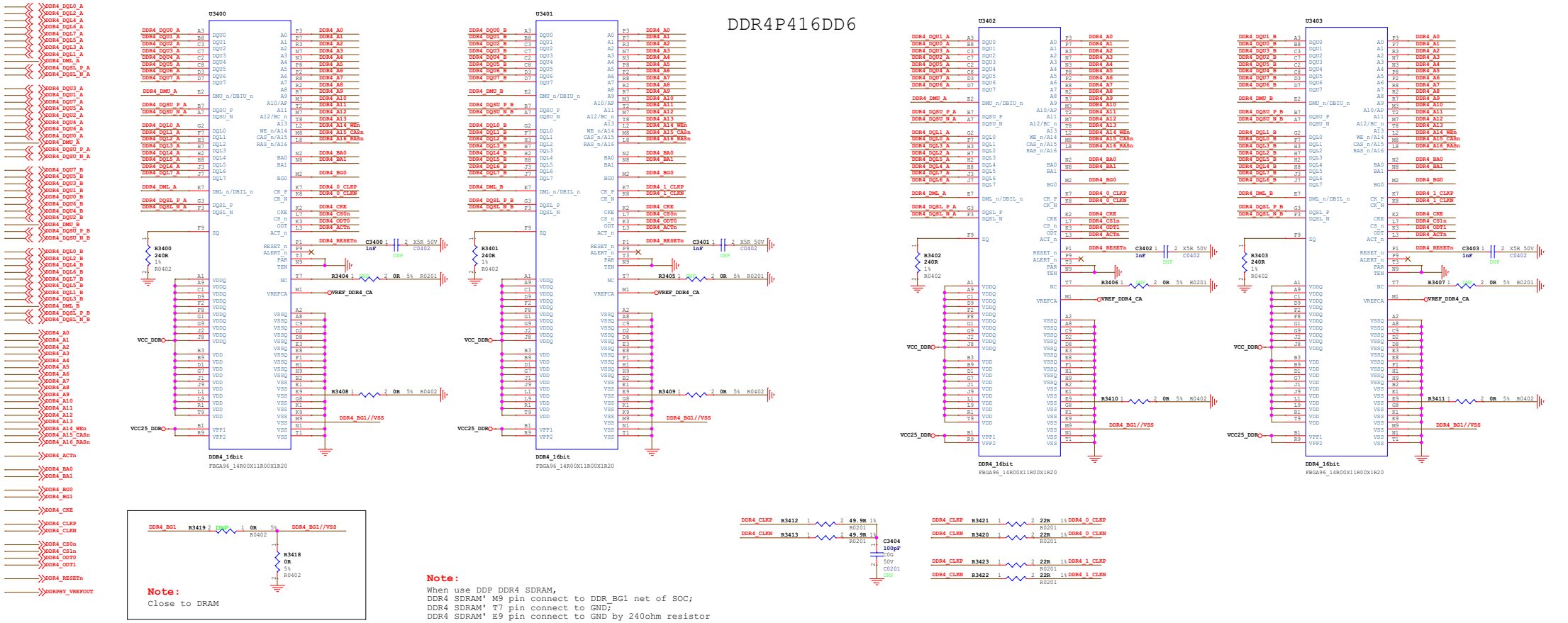

Note:
Close to DRAM

Note:
When use DDP DDR4 SDRAM,
DDR4 SDRAM' M9 pin connect to DDR_BG1 net of SOC;
DDR4 SDRAM' T7 pin connect to GND;
DDR4 SDRAM' E9 pin connect to GND by 240ohm resistor

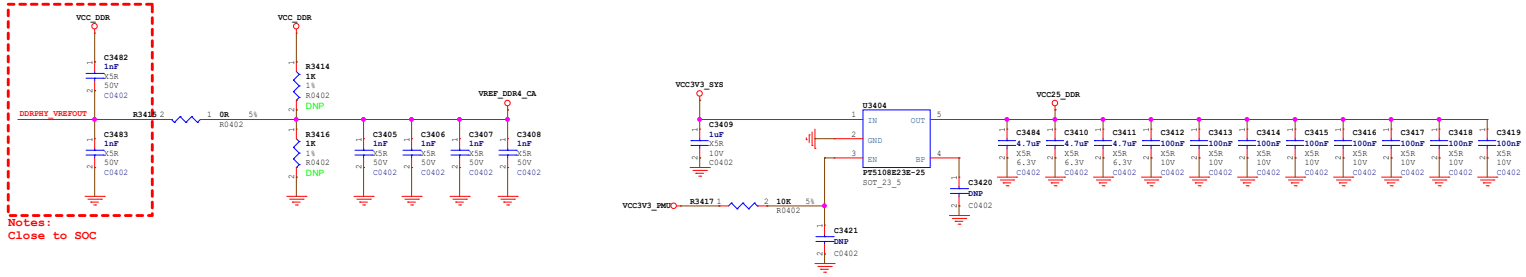

Notes:
Close to SOC

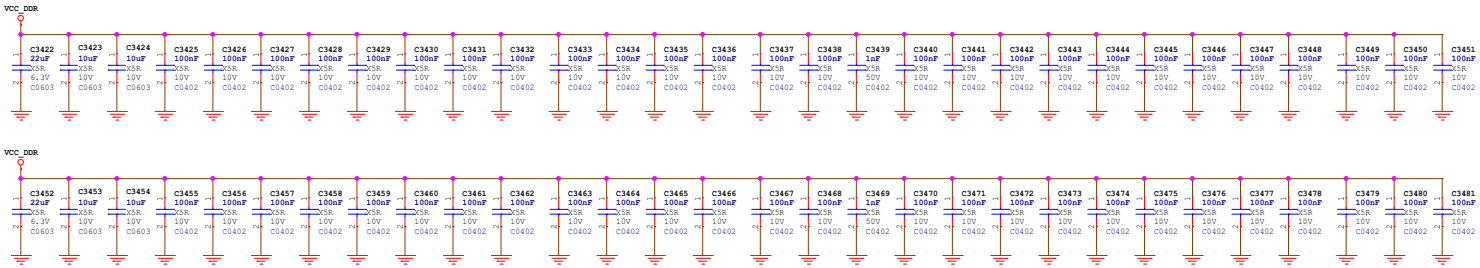

Rockchip Confidential

Rockchip 瑞芯微电子	Rockchip Electronics Co., Ltd		
Project:	RK3568_AIoT_REF_SCH		
File:	34.DRAM-DDR4_4x16Bit_96P		
Date:	Tuesday, September 26, 2023	Rev:	V2.0
Designed by: Zhangtz	Reviewed by: Default	Sheet:	29 of 72

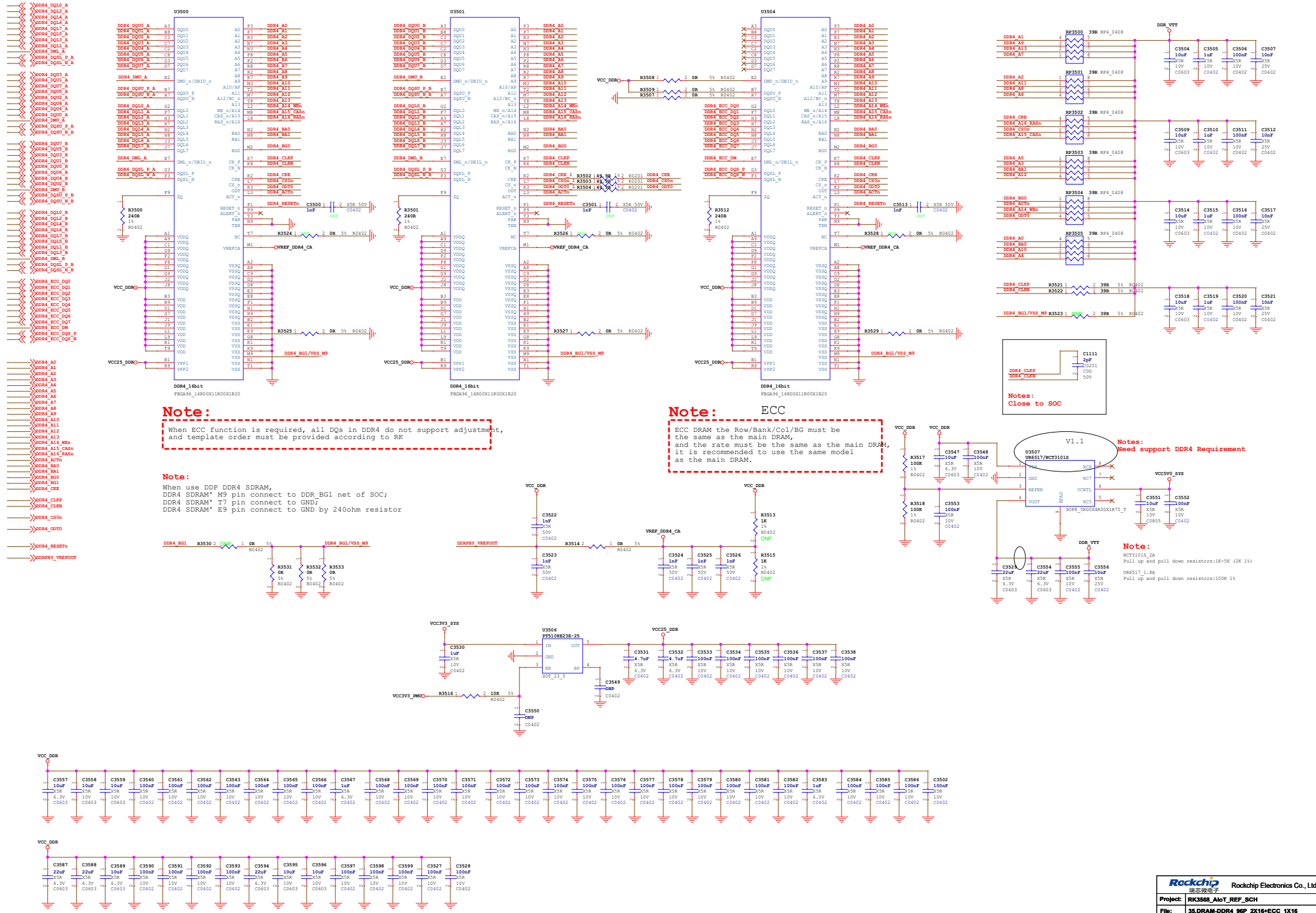

Rockchip Confidential

Rockchip 瑞芯微电子	Rockchip Electronics Co., Ltd
Project:	RK3568_AIoT_REF_SCH
File:	35.DRAM-DDR4_96P_2X16+ECC_1X16
Date: Tuesday, September 26, 2023	Rev: V2.0
Designed by: Zhangtz / Reviewed by: Default	Sheet: 30 of 72

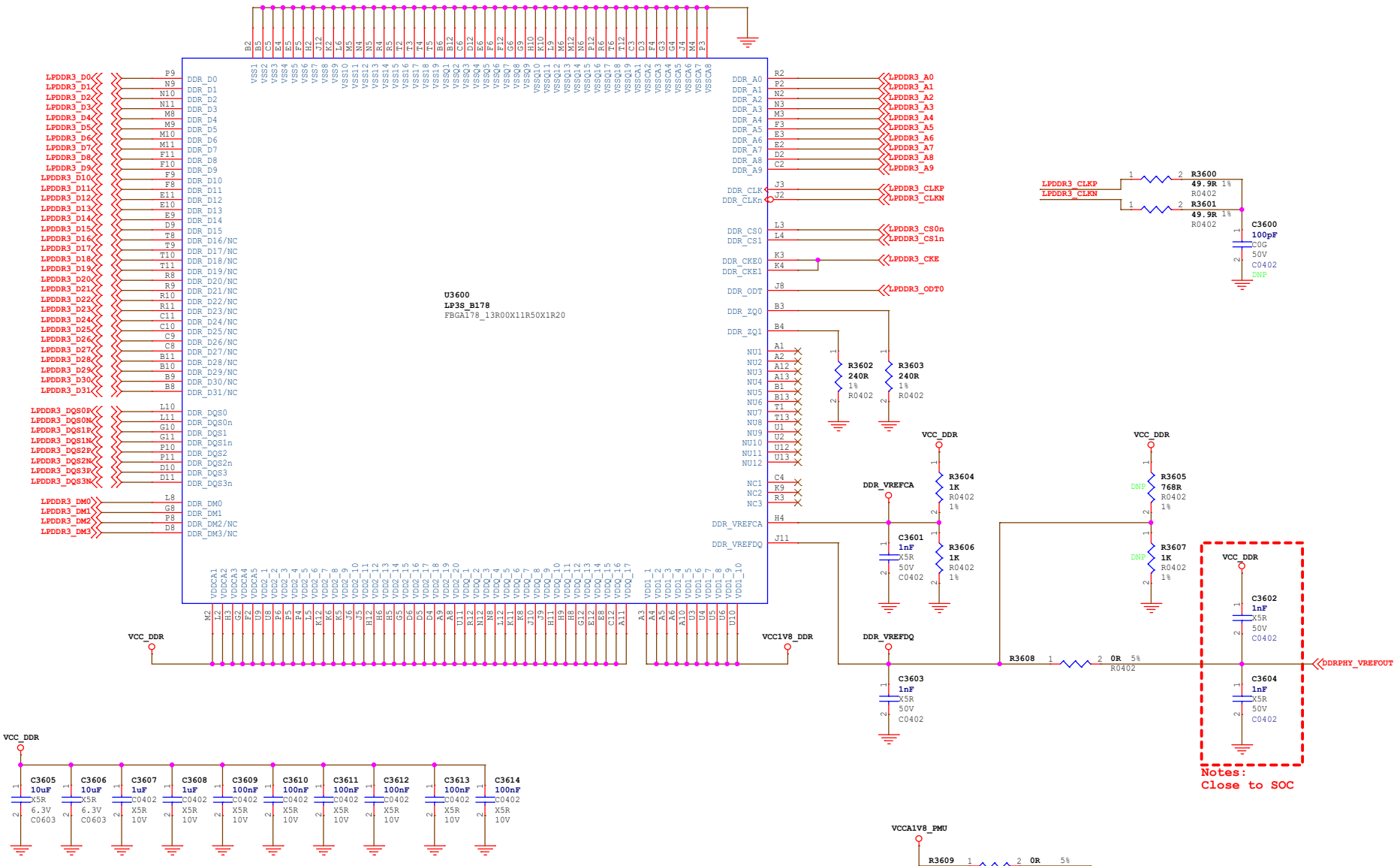

Rockchip Confidential

Rockchip 瑞芯微电子	Rockchip Electronics Co., Ltd		
Project:	RK3568_AIoT_REF_SCH		
File:	36.DRAM-LPDDR3_1X32bit_178P		
Date:	Tuesday, September 26, 2023	Rev:	V2.0
Designed by: Zhangdz	Reviewed by: Default	Sheet:	31 of 72

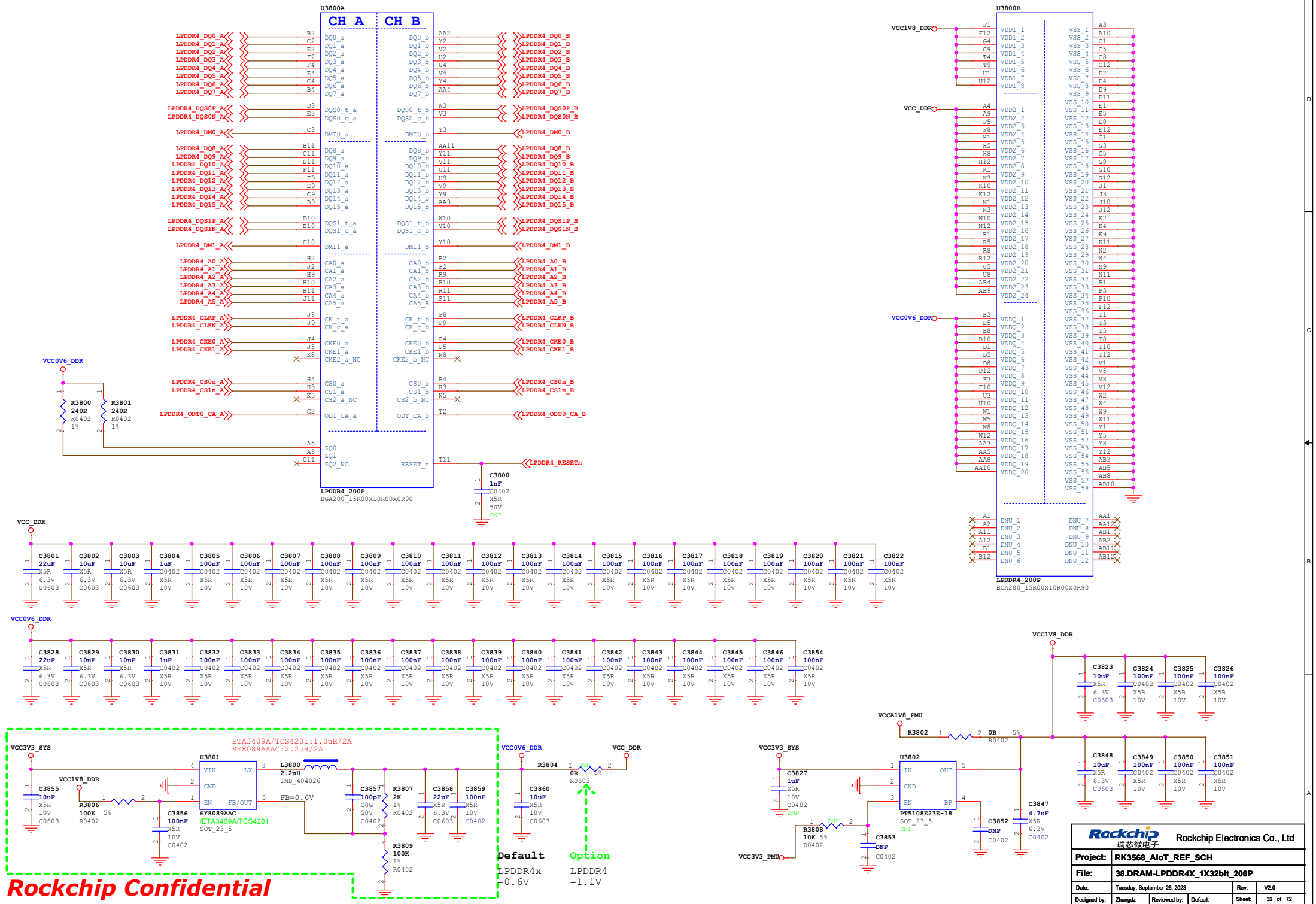
U3800A
CH A
CH B
LPDDR4_200P
BGA200_15R00X10R00X0R90
U3800B
LPDDR4_200P
BGA200_15R00X10R00X0R90
VCC1V8_DDR
VCC_DDR
VCC0V6_DDR
R3800 240R R0402 1%
R3801 240R R0402 1%
C3800 1nF C0402 X5R 50V DNP
ETA3409A/TCS4201:1.0uH/2A
SY8089AAAC:2.2uH/2A
U3801
SY8089AAC
/ETA3409A/TCS4201
SOT_23_5
L3800 2.2uH IND_404026
FB=0.6V
R3804 0R R0603
C3860 10uF X5R 10V C0603
Default
LPDDR4x
=0.6V
Option
LPDDR4
=1.1V
VCCA1V8_PMU
R3802 0R R0402
U3802
PT5108E23E-18
SOT_23_5
VCC3V3_PMU
Rockchip Confidential
Rockchip Electronics Co., Ltd
Project: RK3568_AIoT_REF_SCH
File: 38.DRAM-LPDDR4X_1X32bit_200P
Date: Tuesday, September 26, 2023
Rev: V2.0
Designed by: Zhangdz
Reviewed by: Default
Sheet: 32 of 72

eMMC Flash

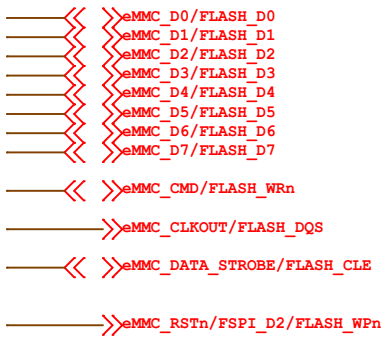

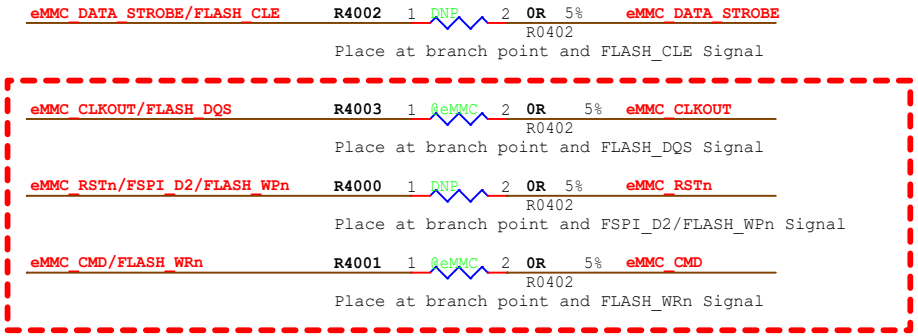

Note:

No need to double layout with Nand Flash, 0R resistor can be omitted

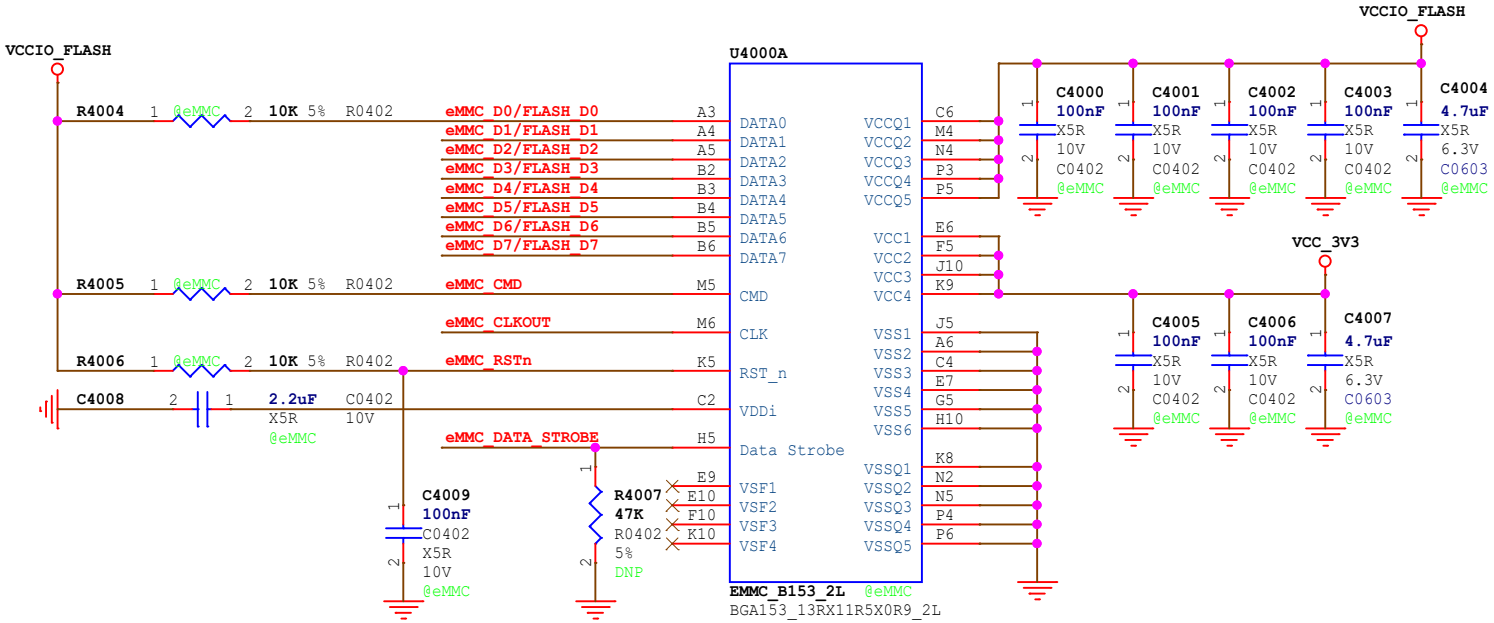

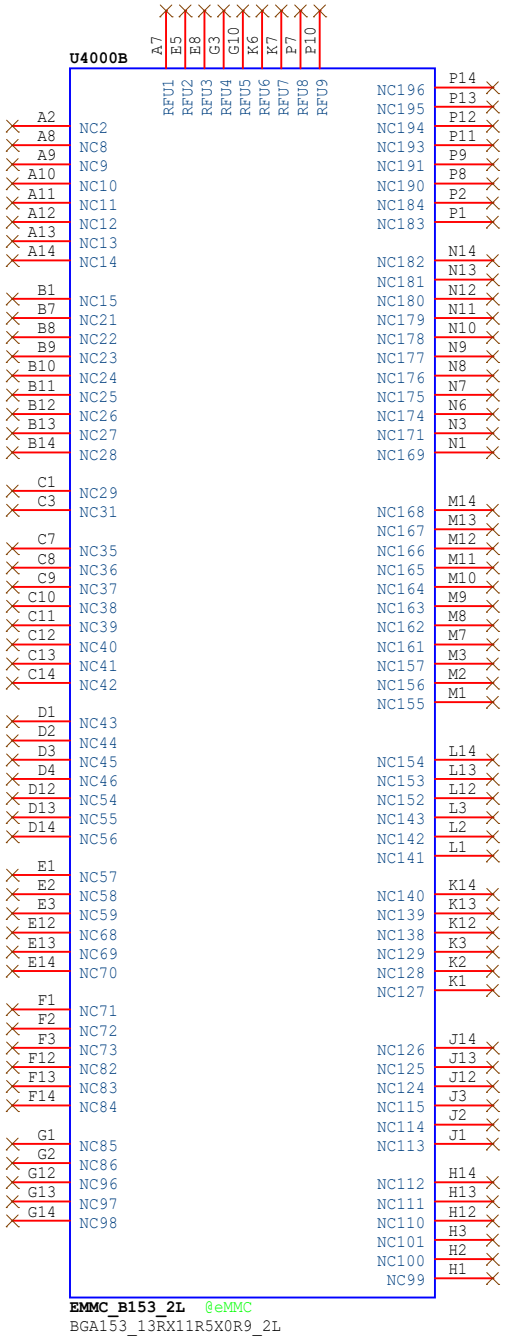

Note:

If Flash is compatible, please notice
when eMMC is used, the option is that @eMMC is mounted, @Nand is not mounted,@SPI Flash is not mounted
when Nand is used, the option is that @Nand is mounted, @eMMC is not mounted,@SPI Flash is not mounted
when SPI Flash is used, the option is that SPI Flash is mounted, @eMMC is not mounted,@Nand is not mounted

Rockchip Confidential

Rockchip 瑞芯微电子	Rockchip Electronics Co., Ltd				
Project:	RK3568_AIoT_REF_SCH				
File:	40.Flash-eMMC Flash				
Date:	Tuesday, September 26, 2023			Rev:	V2.0
Designed by:	Zhangdz	Reviewed by:	Default	Sheet:	33 of 72

Nand Flash

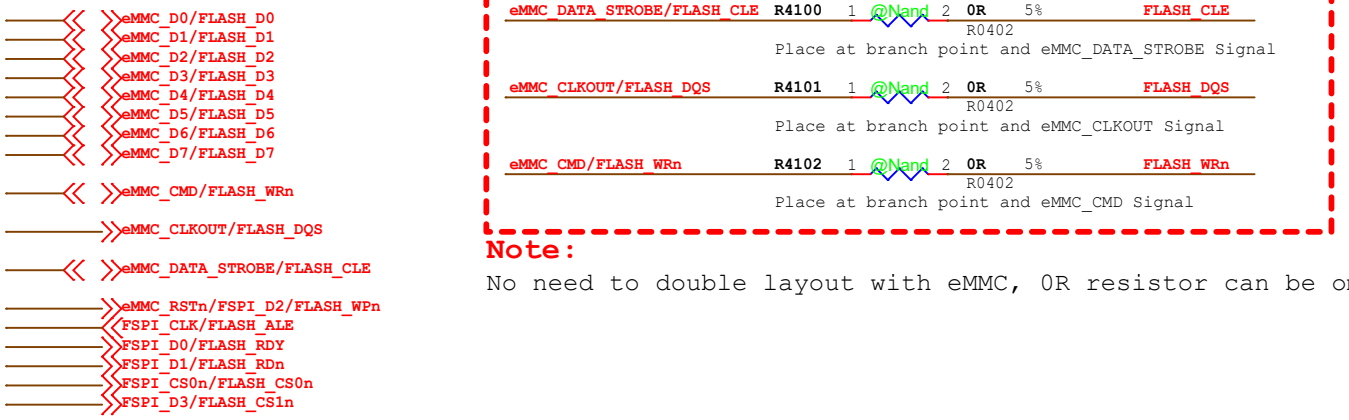

Note:

No need to double layout with eMMC, 0R resistor can be omitted

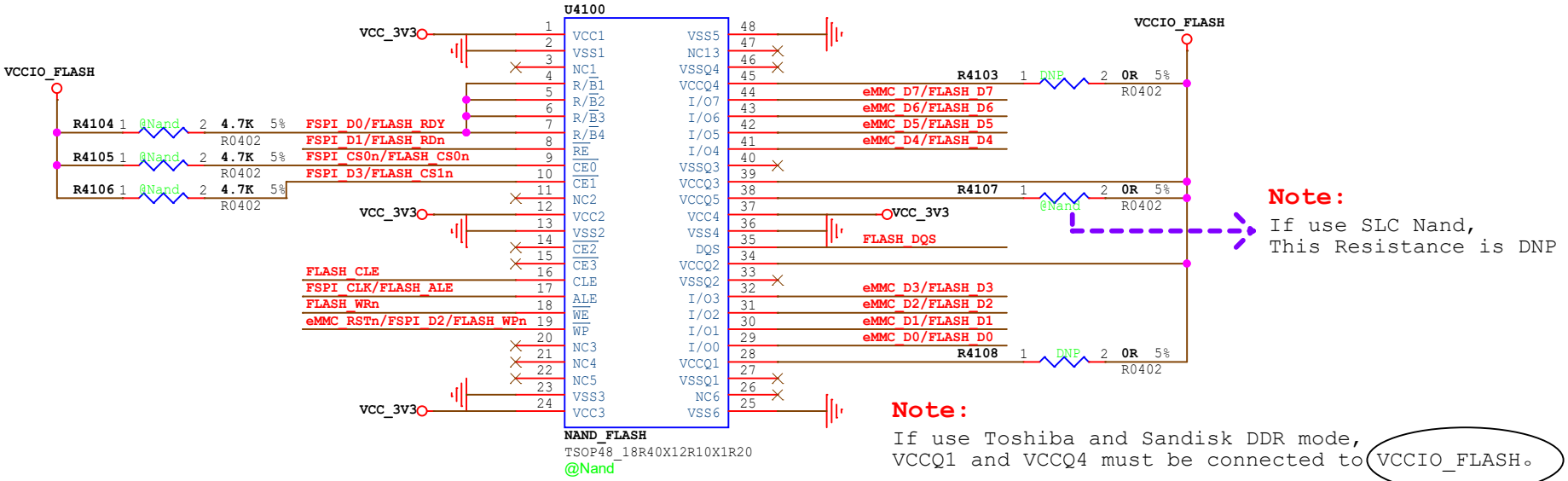

Note:

If use SLC Nand,
This Resistance is DNP

Note:

If use Toshiba and Sandisk DDR mode,
VCCQ1 and VCCQ4 must be connected to VCCIO_FLASH。

V1.1

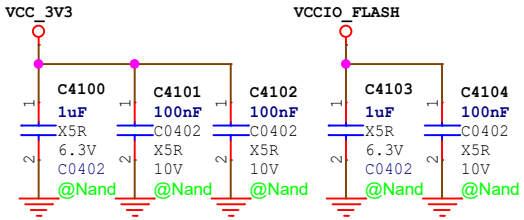

Note:

If Flash is compatible, please notice
when eMMC is used, the option is that @eMMC is mounted, @Nand is not mounted,@SPI Flash is not mounted
when Nand is used, the option is that @Nand is mounted, @eMMC is not mounted,@SPI Flash is not mounted
when SPI Flash is used, the option is that SPI Flash is mounted, @eMMC is not mounted,@Nand is not mounted

Rockchip Confidential

Rockchip 瑞芯微电子	Rockchip Electronics Co., Ltd				
Project:	RK3568_AIoT_REF_SCH				
File:	41.Flash-Nand Flash(Option)				
Date:	Wednesday, September 27, 2023			Rev:	V2.0
Designed by:	Zhangdz	Reviewed by:	Default	Sheet:	34 of 72

MicroSD Card

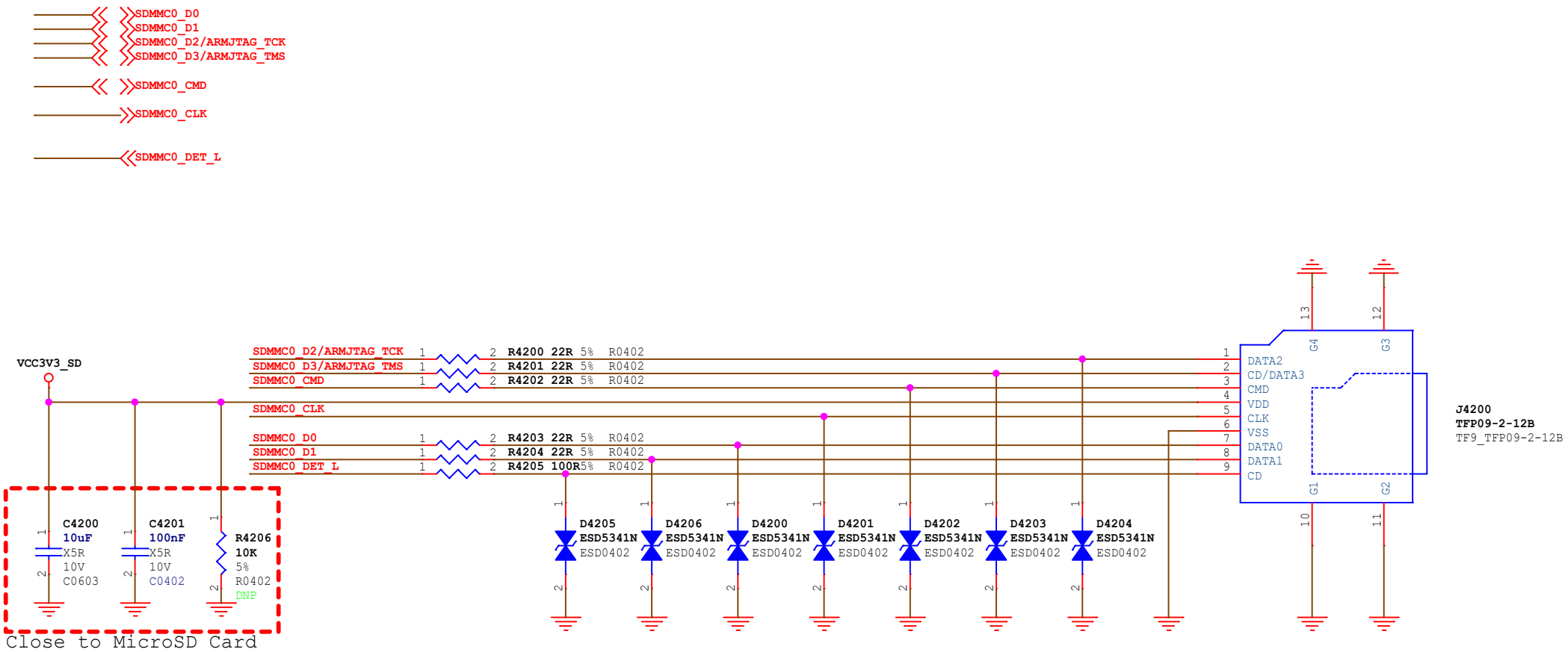

MicroSD Card

Rockchip 瑞芯微电子	Rockchip Electronics Co., Ltd				
Project:	RK3568_AIoT_REF_SCH				
File:	42.Flash-MicroSD Card				
Date:	Tuesday, September 26, 2023			Rev:	V2.0
Designed by:	Zhangdz	Reviewed by:	Default	Sheet:	35 of 72

Rockchip Confidential

SPI Flash

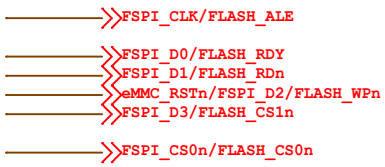

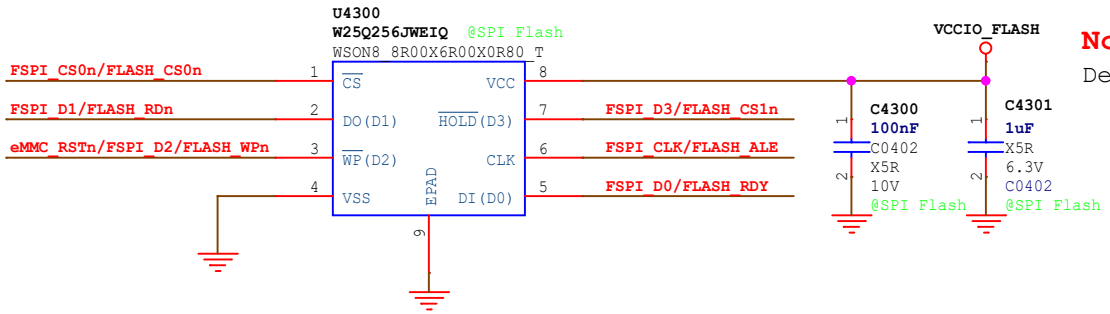

Note:

Default: 1.8V

Support:
1bit SPI NOR or SPI NAND
4bit SPI NOR or SPI NAND

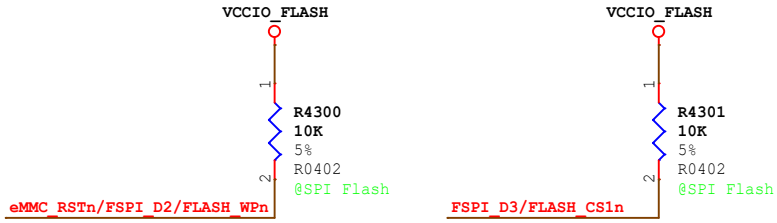

Note:

If Flash is compatible, please notice
when eMMC is used, the option is that @eMMC is mounted, @Nand is not mounted,@SPI Flash is not mounted
when Nand is used, the option is that @Nand is mounted, @eMMC is not mounted,@SPI Flash is not mounted
when SPI Flash is used, the option is that SPI Flash is mounted, @eMMC is not mounted,@Nand is not mounted

Rockchip Confidential

DVP_PWREN0_H_GPIO0_B0
HDMIRX_PWREN_H_GPIO0_D6

Camera0 Power supply

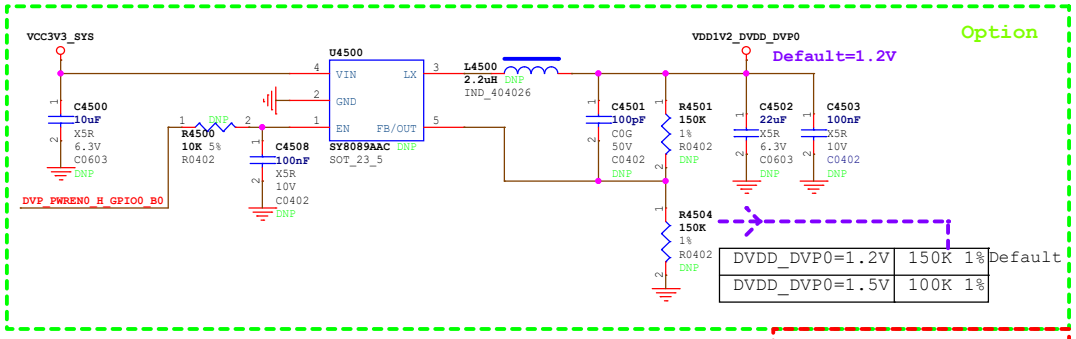

DVDD_DVP0=1.2V	150K 1%	Default
DVDD_DVP0=1.5V	100K 1%	

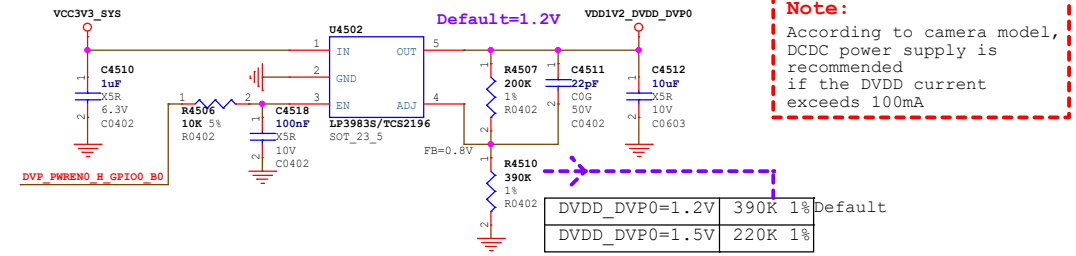

DVDD_DVP0=1.2V	390K 1%	Default
DVDD_DVP0=1.5V	220K 1%	

Note:
According to camera model,
DCDC power supply is
recommended
if the DVDD current
exceeds 100mA

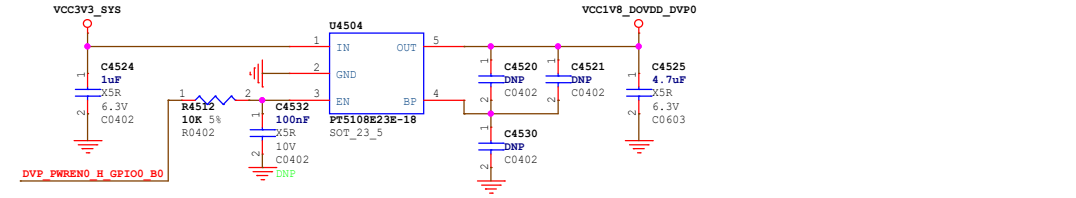

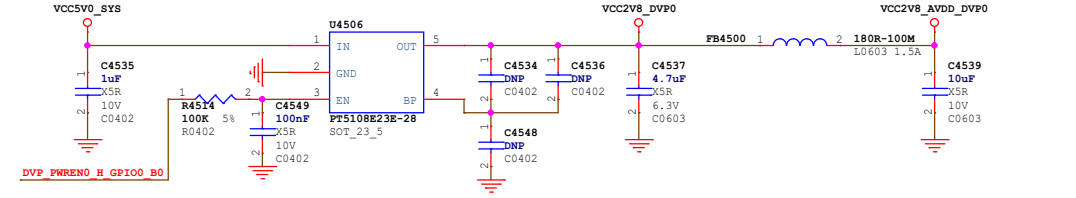

Note:
Adjust the power on sequence according to the camera model
eg:GC8034
Power on Sequence
1.8V-->1.2V-->2.8V--->MCLK-->PWDN--->RST

Camera1 Power supply

Note:
When the binocular camera is used,
If separate control is required,
separate power supply is recommended

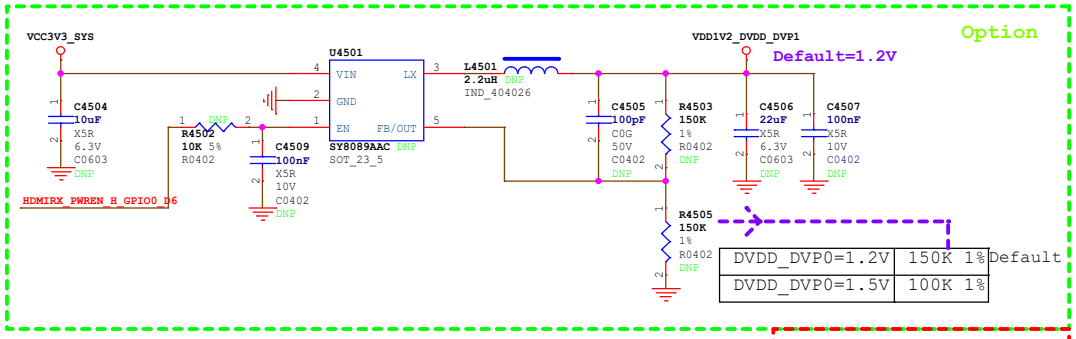

DVDD_DVP0=1.2V	150K 1%	Default
DVDD_DVP0=1.5V	100K 1%	

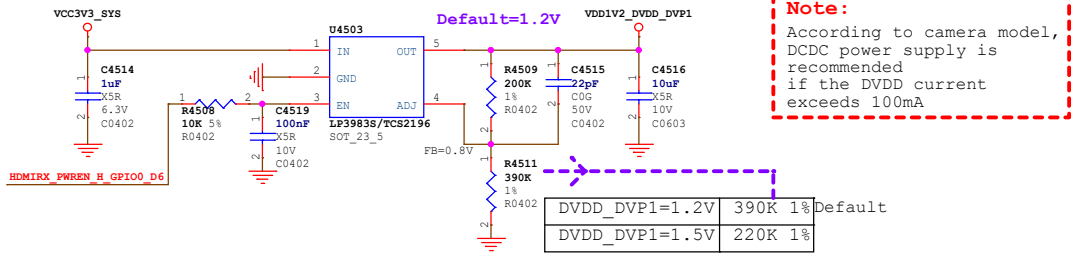

DVDD_DVP1=1.2V	390K 1%	Default
DVDD_DVP1=1.5V	220K 1%	

Note:
According to camera model,
DCDC power supply is
recommended
if the DVDD current
exceeds 100mA

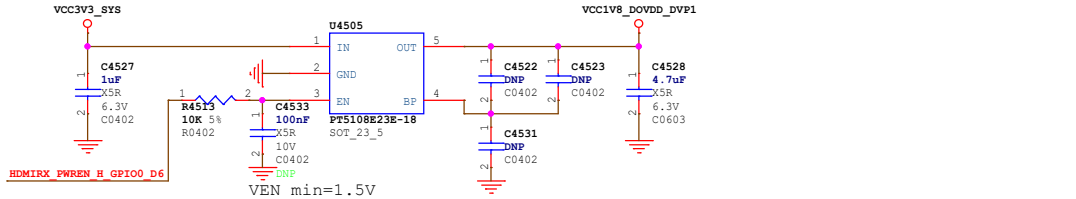

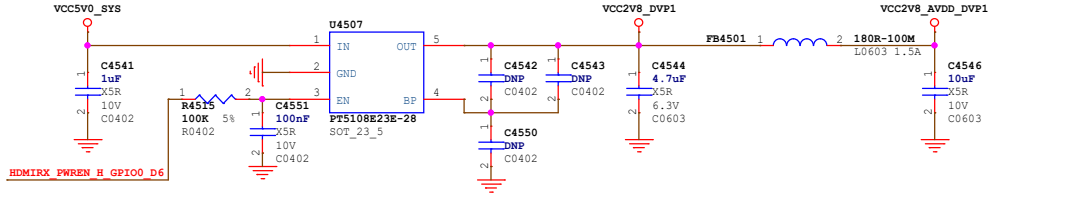

Rockchip Confidential

Rockchip 瑞芯微电子	Rockchip Electronics Co., Ltd				
Project:	RK3568_AIoT_REF_SCH				
File:	45.VI-Camera_Power				
Date:	Tuesday, September 26, 2023			Rev:	V2.0
Designed by:	Zhangdz	Reviewed by:	Default	Sheet:	37 of 72

Camera0:MIPI_CSI_RX 4Lanes

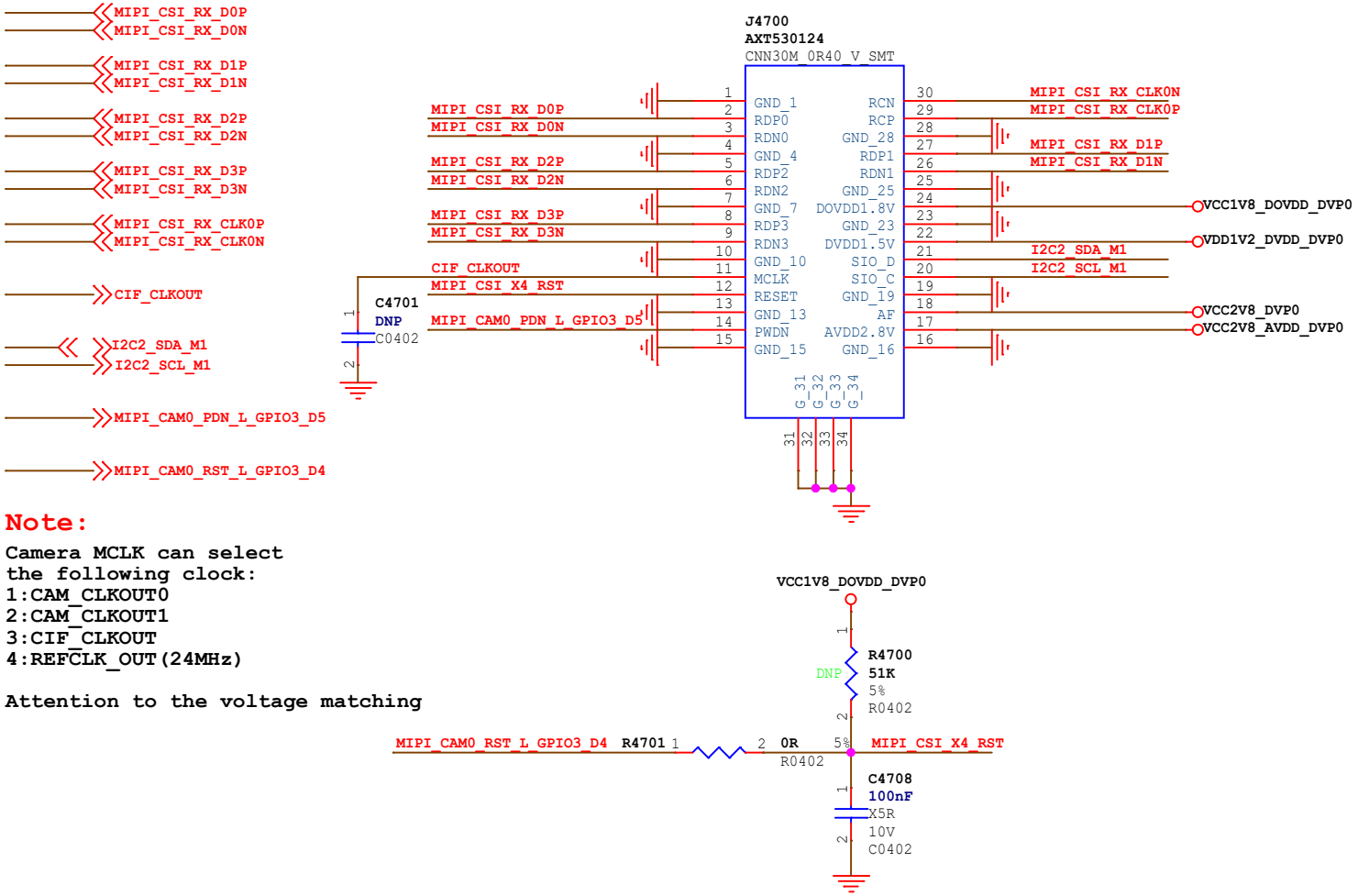

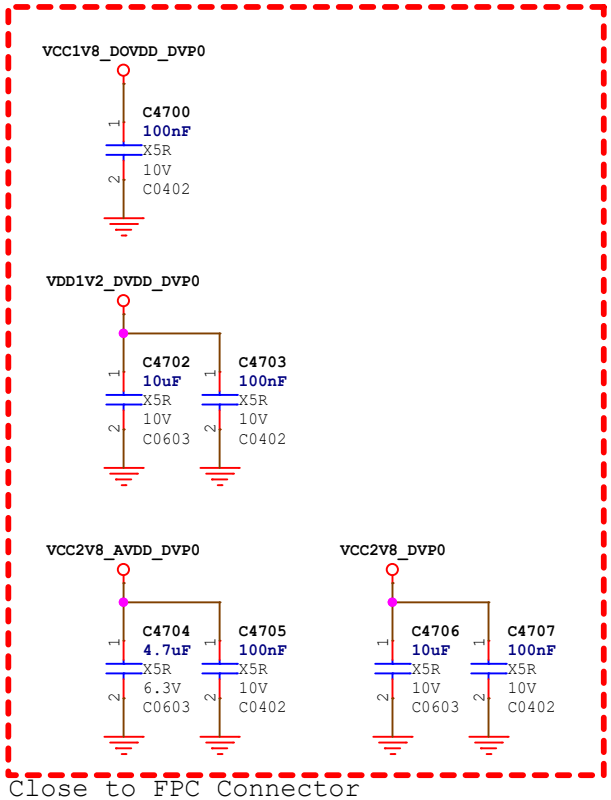

Close to FPC Connector

Note:

Camera MCLK can select the following clock:
1:CAM_CLKOUT0
2:CAM_CLKOUT1
3:CIF_CLKOUT
4:REFCLK_OUT(24MHz)

Attention to the voltage matching

Rockchip Confidential

Rockchip 瑞芯微电子	Rockchip Electronics Co., Ltd				
Project:	RK3568_AIoT_REF_SCH				
File:	47.VI-Camera_MIPI_CSI_1x 4Lanes				
Date:	Tuesday, September 26, 2023			Rev:	V2.0
Designed by:	Zhangdz	Reviewed by:	Default	Sheet:	38 of 72

Camera0:MIPI_CSI_RX 2Lanes

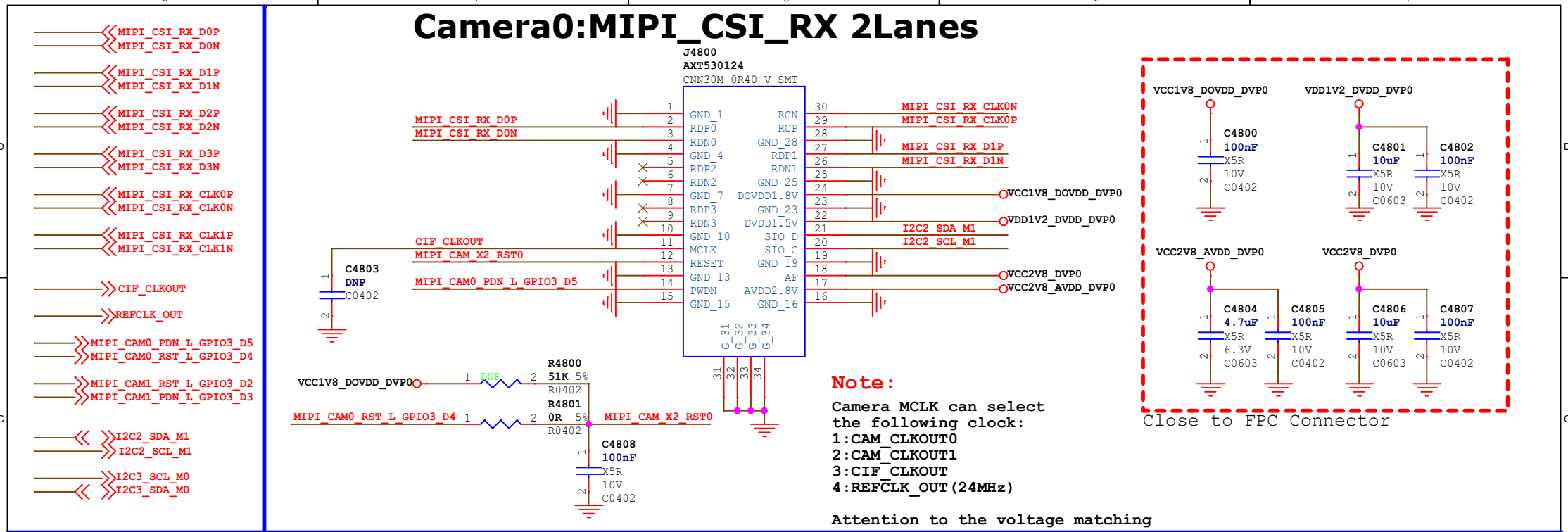

Note:

Camera MCLK can select the following clock:
1:CAM_CLKOUT0
2:CAM_CLKOUT1
3:CIF_CLKOUT
4:REFCLK_OUT(24MHz)

Attention to the voltage matching

Camera1:MIPI_CSI_RX 2Lanes

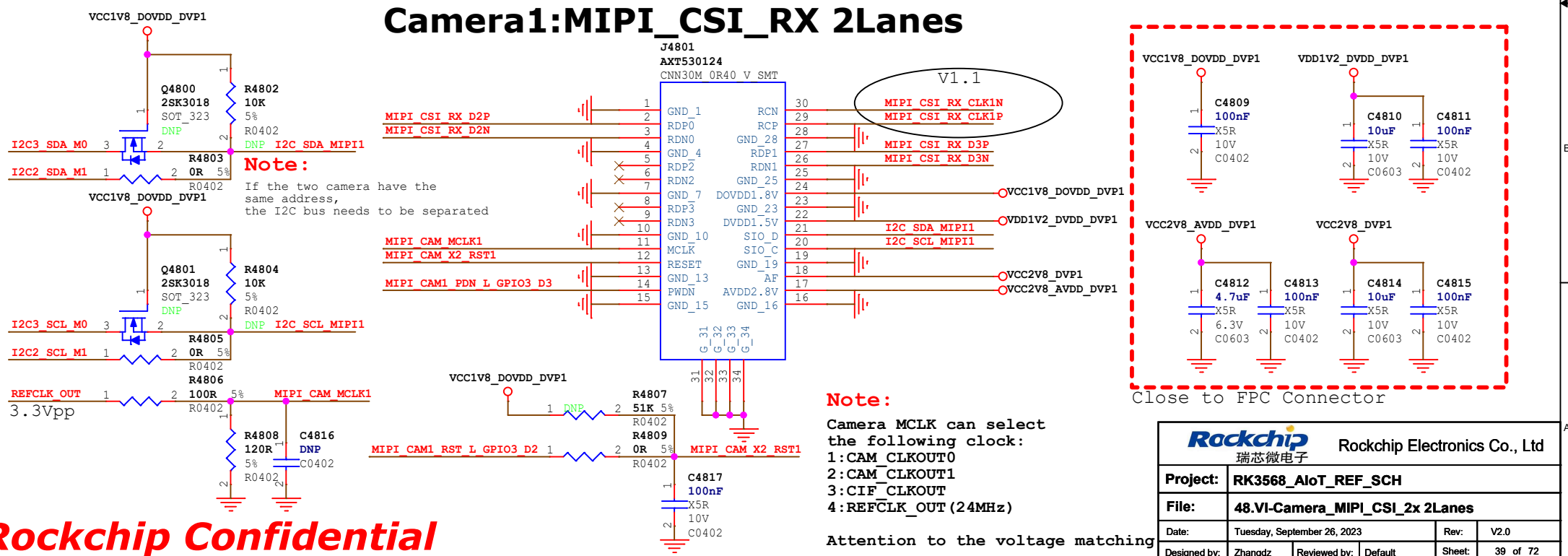

Note:

If the two camera have the same address, the I2C bus needs to be separated

Note:

Camera MCLK can select the following clock:
1:CAM_CLKOUT0
2:CAM_CLKOUT1
3:CIF_CLKOUT
4:REFCLK_OUT(24MHz)

Attention to the voltage matching

Rockchip Confidential

Rockchip 瑞芯微电子	Rockchip Electronics Co., Ltd				
Project:	RK3568_AIoT_REF_SCH				
File:	48.VI-Camera_MIPI_CSI_2x 2Lanes				
Date:	Tuesday, September 26, 2023			Rev:	V2.0
Designed by:	Zhangdz	Reviewed by:	Default	Sheet:	39 of 72

HDMI1.4 RX

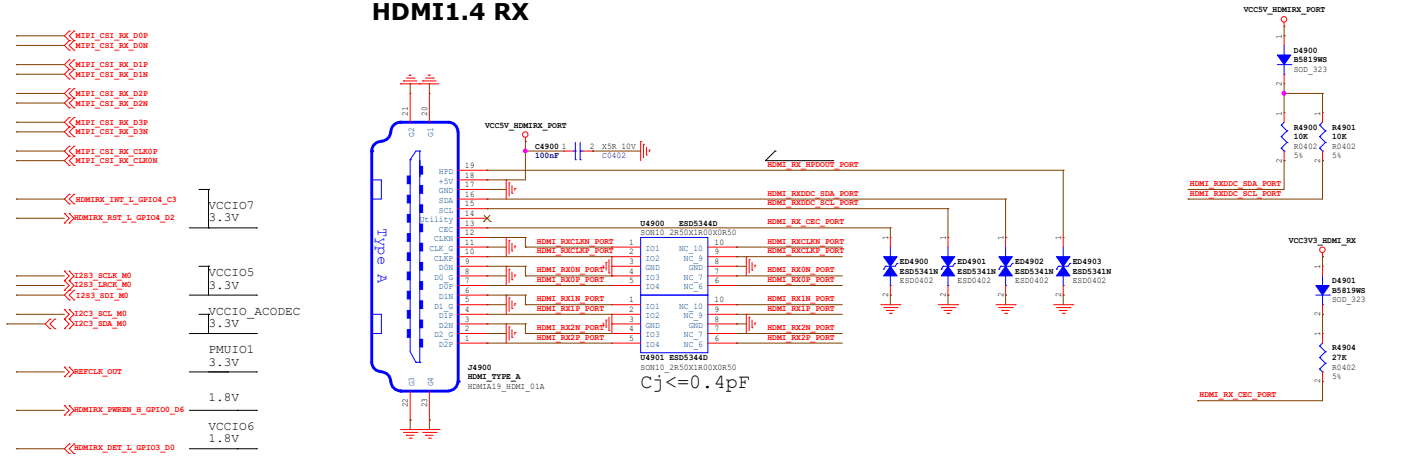

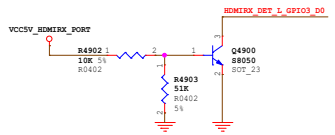

Note:
RK3568 is in sleep state.
To support the insertion of HDMI RX interrupt wake-up, GPIO needs to be assigned to PMUIO0 or PMUIO1 or PMUIO2 domain

HDMIRX_DET_L--->SOC---->SOC I2C--->RK628D--->HDMI_RX_HPDOUT

HDMIRX_DET_L=Low ---> HDMI_RX_HPDOUT=High

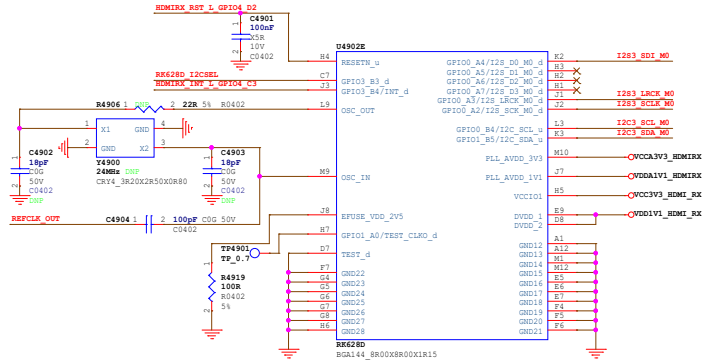

I2C address configuration:

I2C_SEL	I2C_ADDR
0	7'b1010000
1	7'b1010001

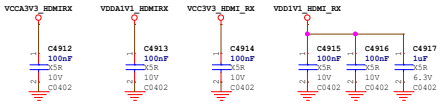

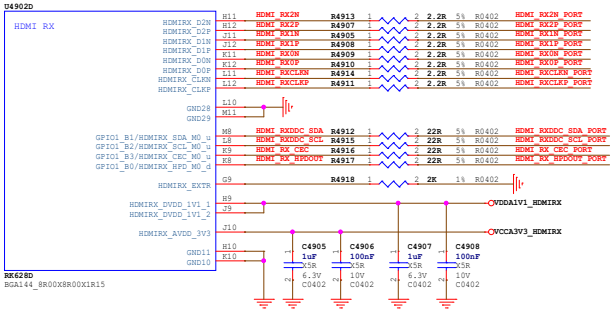

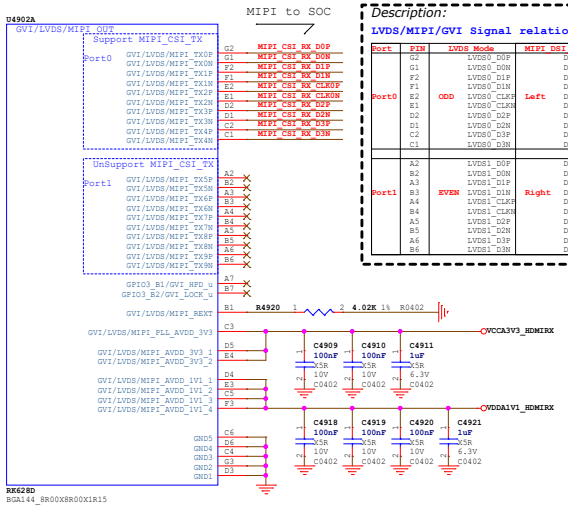

Description:

LVDS/MIPI/GVI Signal relationship:

Port	PIN	LVDS Mode	MIPI_DSI_TX Mode	GVI_Mode	MIPI_CSI_TX
Port0	G2	LVDS0_D0P	DSI0_D0P	GVI_D0P	CSI0_D0P
	G1	LVDS0_D0N	DSI0_D0N	GVI_D0N	CSI0_D0N
	F2	LVDS0_D1P	DSI0_D1P	GVI_D1P	CSI0_D1P
	F1	LVDS0_D1N	DSI0_D1N	GVI_D1N	CSI0_D1N
	E2	LVDS0_CLKP	DSI0_CLKP	-	CSI0_CLKP
	E1	LVDS0_CLKN	DSI0_CLKN		CSI0_CLKN
	D2	LVDS0_D2P	DSI0_D2P	GVI_D2P	CSI0_D2P
	D1	LVDS0_D2N	DSI0_D2N	GVI_D2N	CSI0_D2N
	C2	LVDS0_D3P	DSI0_D3P	GVI_D3P	CSI0_D3P
	C1	LVDS0_D3N	DSI0_D3N	GVI_D3N	CSI0_D3N
Port1	A2	LVDS1_D0P	DSI1_D0P	GVI_D4P	NC
	B2	LVDS1_D0N	DSI1_D0N	GVI_D4N	
	A3	LVDS1_D1P	DSI1_D1P	GVI_D5P	
	B3	LVDS1_D1N	DSI1_D1N	GVI_D5N	
	A4	LVDS1_CLKP	DSI1_CLKP		
	B4	LVDS1_CLKN	DSI1_CLKN		
	A5	LVDS1_D2P	DSI1_D2P	GVI_D6P	
	B5	LVDS1_D2N	DSI1_D2N	GVI_D6N	
	A6	LVDS1_D3P	DSI1_D3P	GVI_D7P	
	B6	LVDS1_D3N	DSI1_D3N	GVI_D7N	

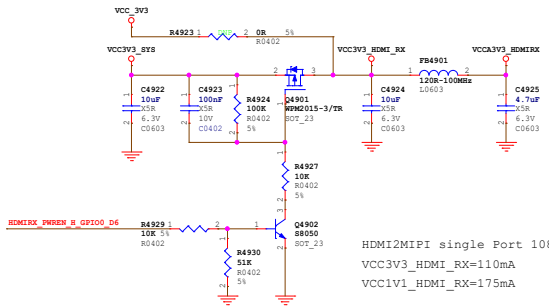

HDMI2MIPI single Port 1080P
VCC3V3_HDMI_RX=110mA
VCC1V1_HDMI_RX=175mA

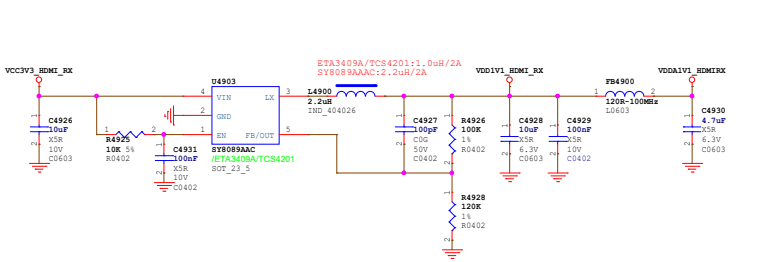

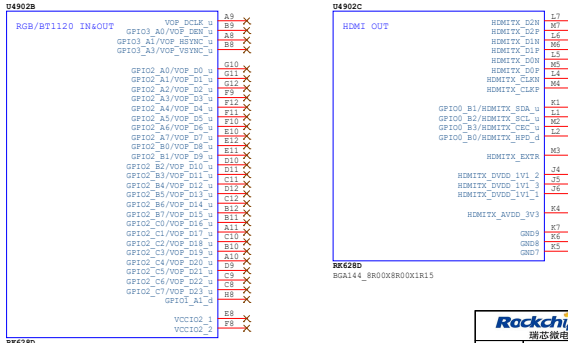

Rockchip Confidential

Rockchip 瑞芯微电子	Rockchip Electronics Co., Ltd		
Project:	RK3568_AIoT_REF_SCH		
File:	49.V1-HDMI1.4 RX(To MIPICSI RX)		
Date:	Tuesday, September 26, 2023	Rev:	V2.0
Designed by: Zhangtz	Reviewed by: Default	Sheet:	40 of 72

HDMI2.0 TX

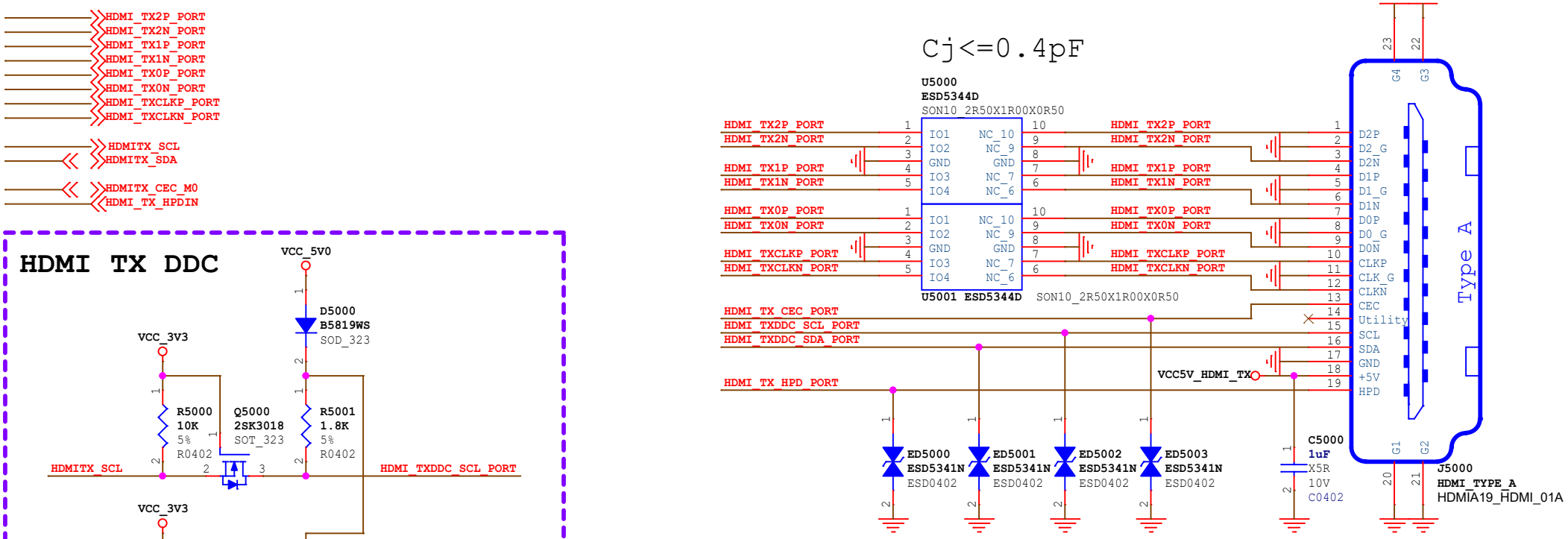

HDMI TX DDC

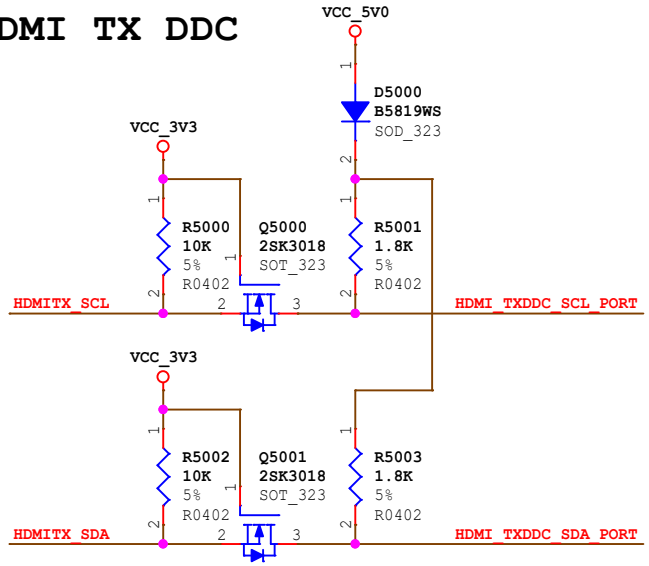

HDMI TX CEC

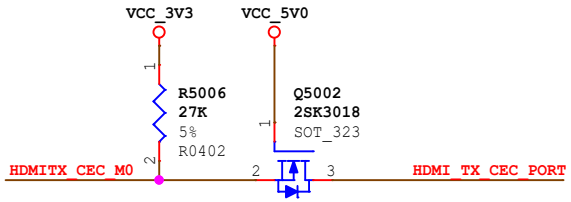

HDMI TX HPD

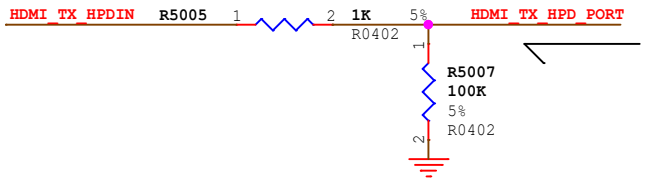

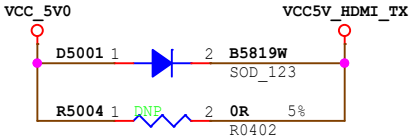

Rockchip Confidential

Rockchip 瑞芯微电子	Rockchip Electronics Co., Ltd				
Project:	RK3568_AIoT_REF_SCH				
File:	50.VO-HDMI2.0 TX				
Date:	Tuesday, September 26, 2023			Rev:	V2.0
Designed by:	Zhangdz	Reviewed by:	Default	Sheet:	41 of 72

Single-MIPI0 LCM

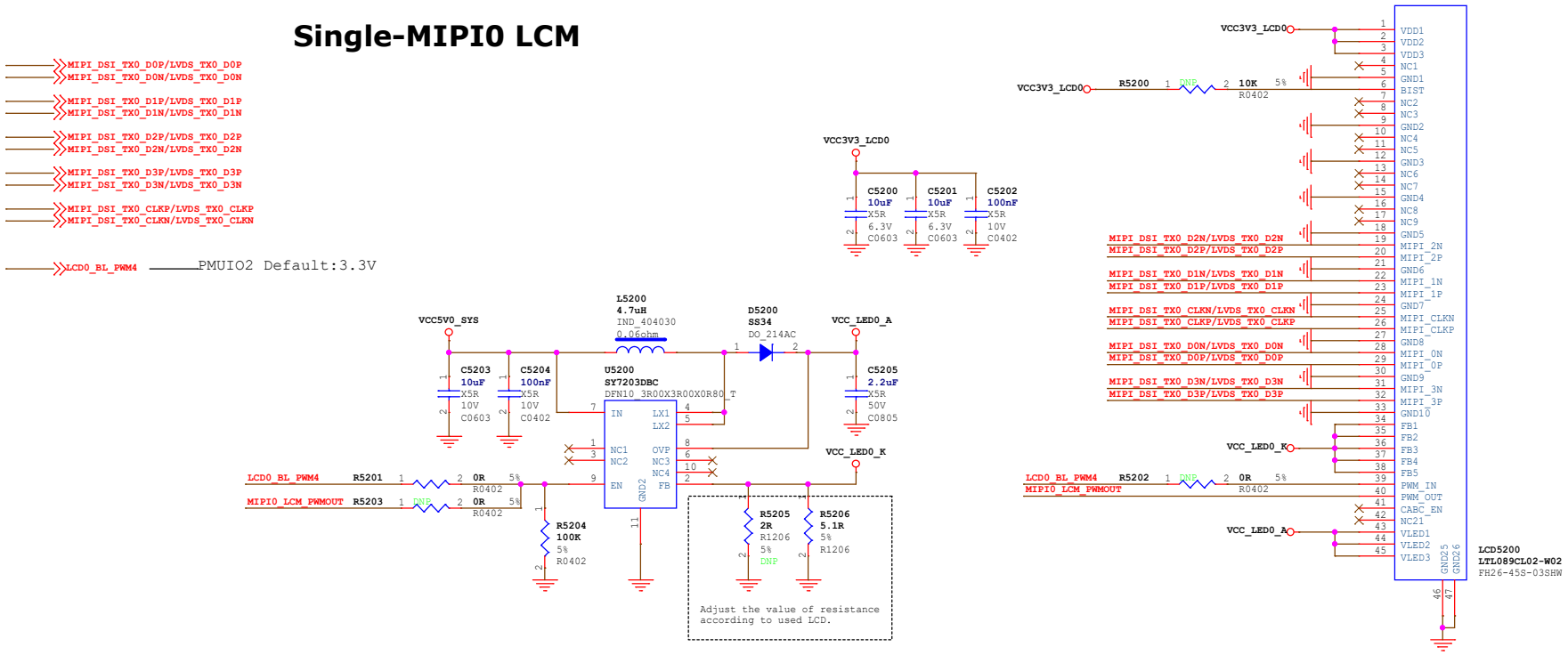

Single- MIPI1 LCM

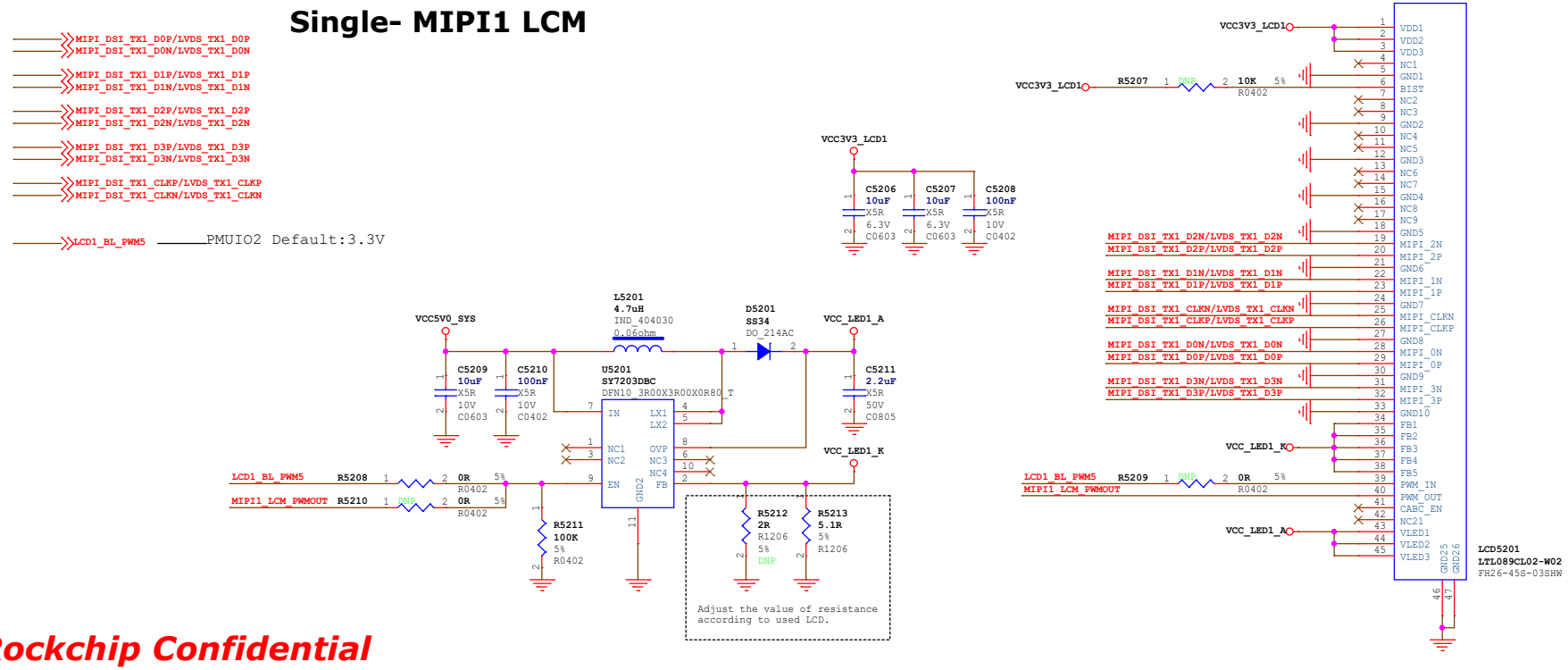

Rockchip Confidential

Rockchip 瑞芯微电子	Rockchip Electronics Co., Ltd				
Project:	RK3568_AIoT_REF_SCH				
File:	52.VO-LCM_MIPI_DSI_TX0/TX1				
Date:	Tuesday, September 26, 2023			Rev:	V2.0
Designed by:	Zhangdz	Reviewed by:	Default	Sheet:	42 of 72

Dual-MIPI LCM

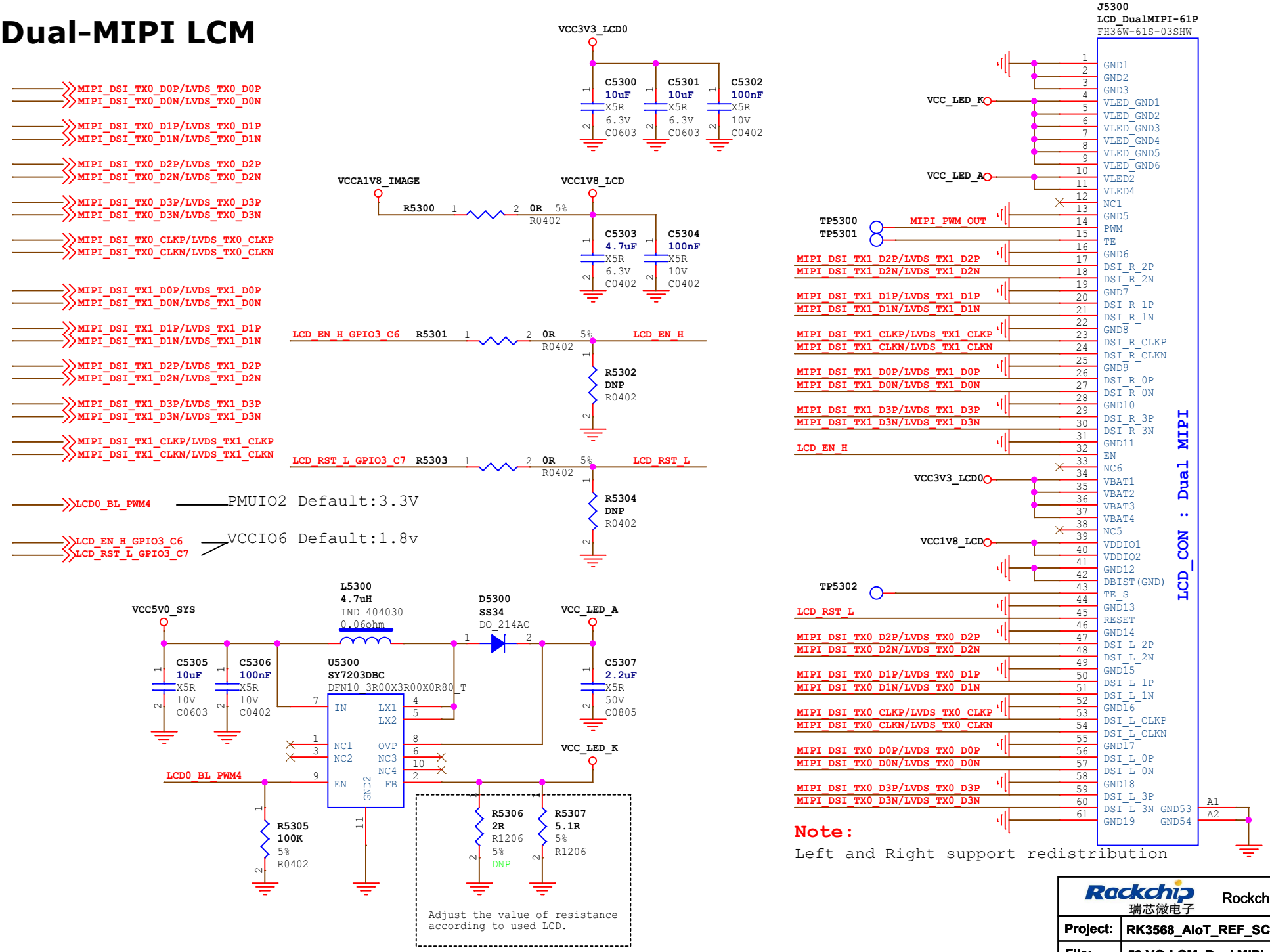

Note:

Left and Right support redistribution

Rockchip 瑞芯微电子	Rockchip Electronics Co., Ltd				
Project:	RK3568_AIoT_REF_SCH				
File:	53.VO-LCM_Dual MIPI_DSI TX				
Date:	Tuesday, September 26, 2023			Rev:	V2.0
Designed by:	Zhangdz	Reviewed by:	Default	Sheet:	43 of 72

Rockchip Confidential

Single-LVDS0 LCM

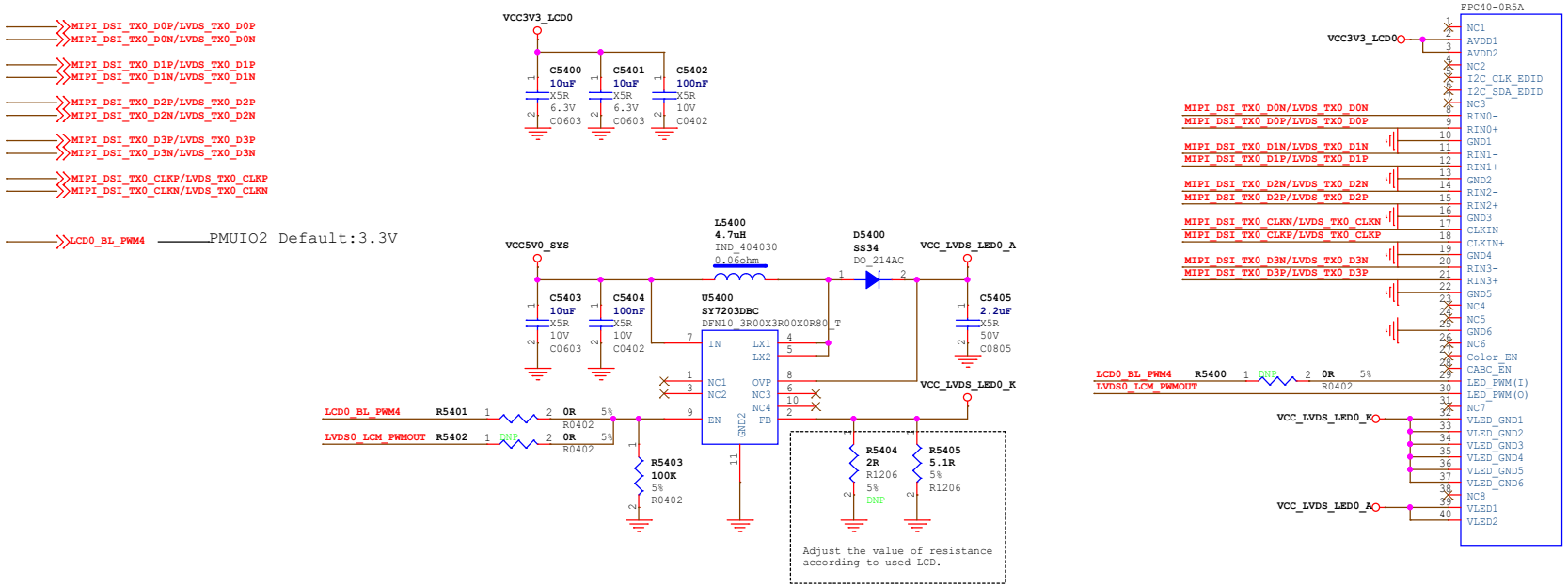

Single-LVDS1 LCM

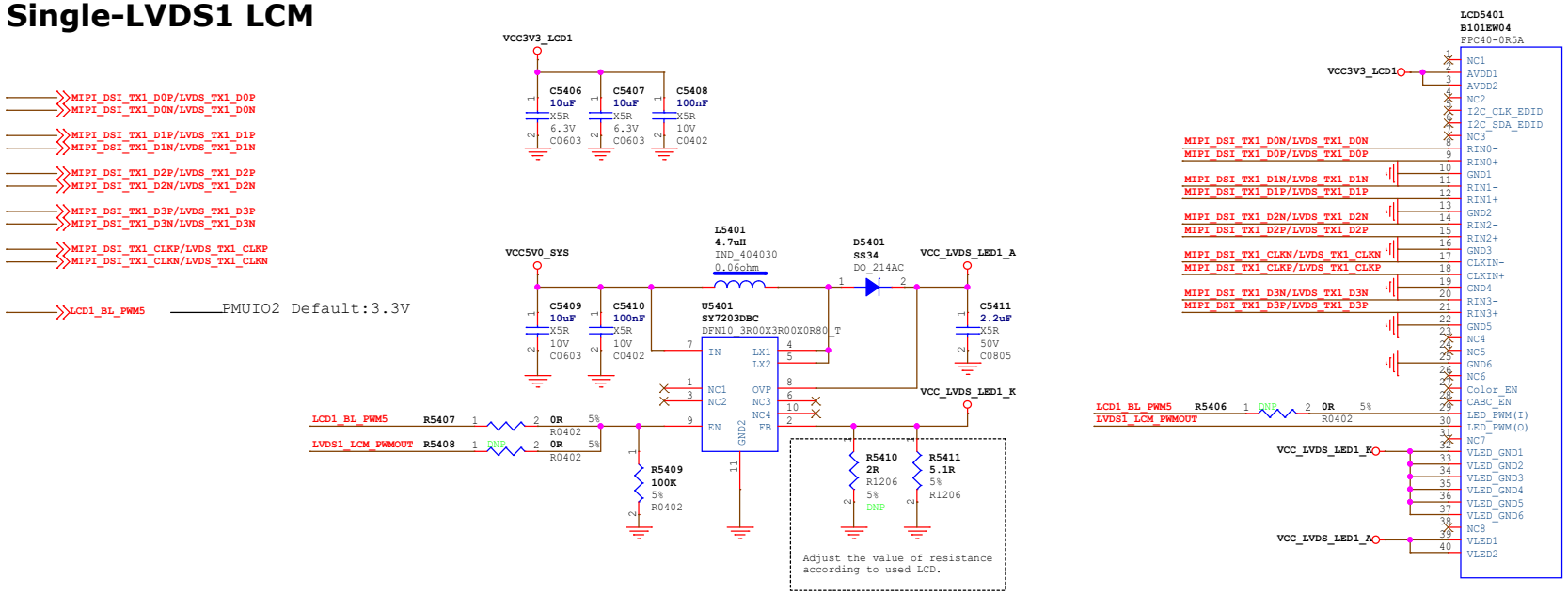

Rockchip 瑞芯微电子	Rockchip Electronics Co., Ltd		
Project:	RK3568_AIoT_REF_SCH		
File:	54.VO-LCM_LVDS TX0/TX1		
Date:	Tuesday, September 26, 2023	Rev:	V2.0
Designed by: Zhangdz	Reviewed by:	Sheet:	44 of 72

Rockchip Confidential

Dual-LVDS LCM

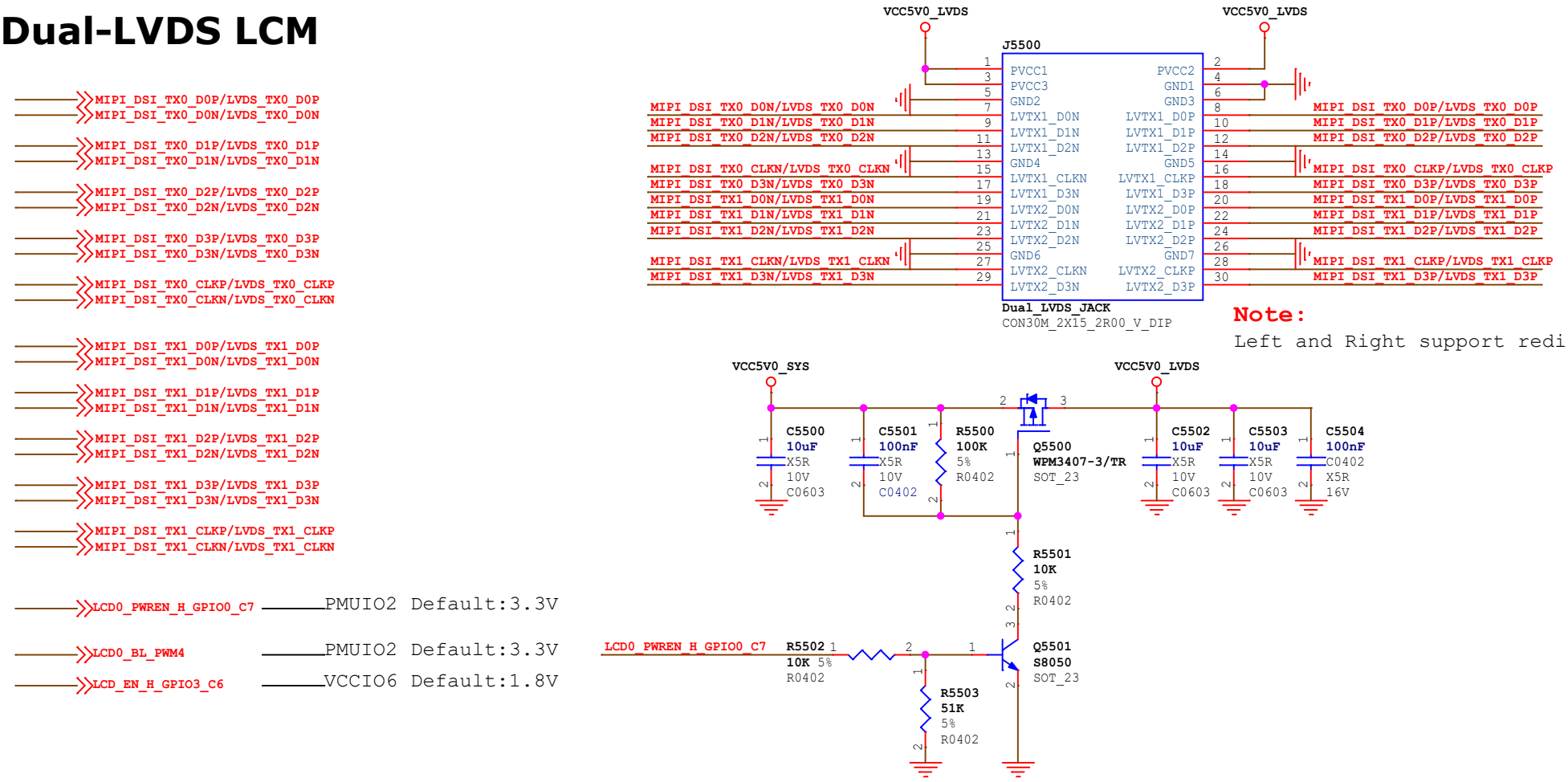

Dual LVDS Backlight

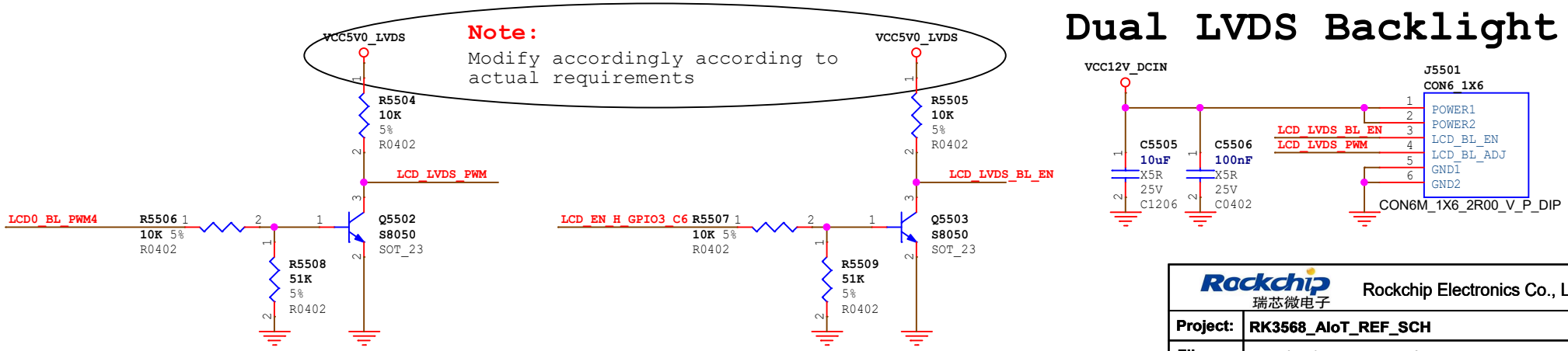

Rockchip Confidential

Rockchip 瑞芯微电子	Rockchip Electronics Co., Ltd		
Project:	RK3568_AIoT_REF_SCH		
File:	55.VO-LCM_Dual LVDS TX		
Date:	Tuesday, September 26, 2023	Rev:	V2.0
Designed by: Zhangdz	Reviewed by:	Sheet:	45 of 72

Single-eDP LCM

Note:

For EDP displays with edp1.2a or above, the bias resistors R5600 and R5601 of aux are not mounted.

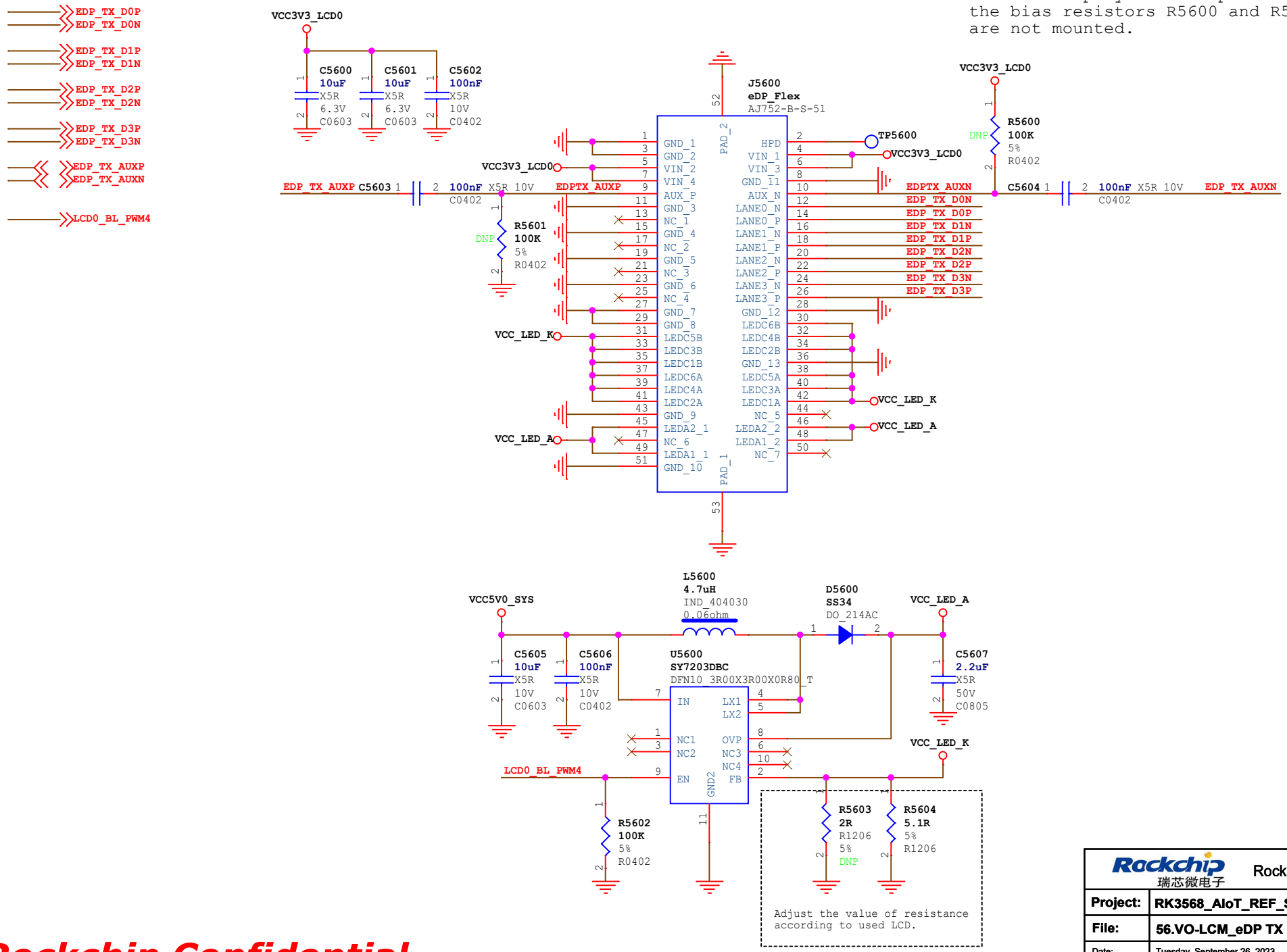

Rockchip 瑞芯微电子	Rockchip Electronics Co., Ltd		
Project:	RK3568_AIoT_REF_SCH		
File:	56.VO-LCM_eDP TX		
Date:	Tuesday, September 26, 2023	Rev:	V2.0
Designed by: Zhangdz	Reviewed by: Default	Sheet:	46 of 72

Rockchip Confidential

Touch Panel connector

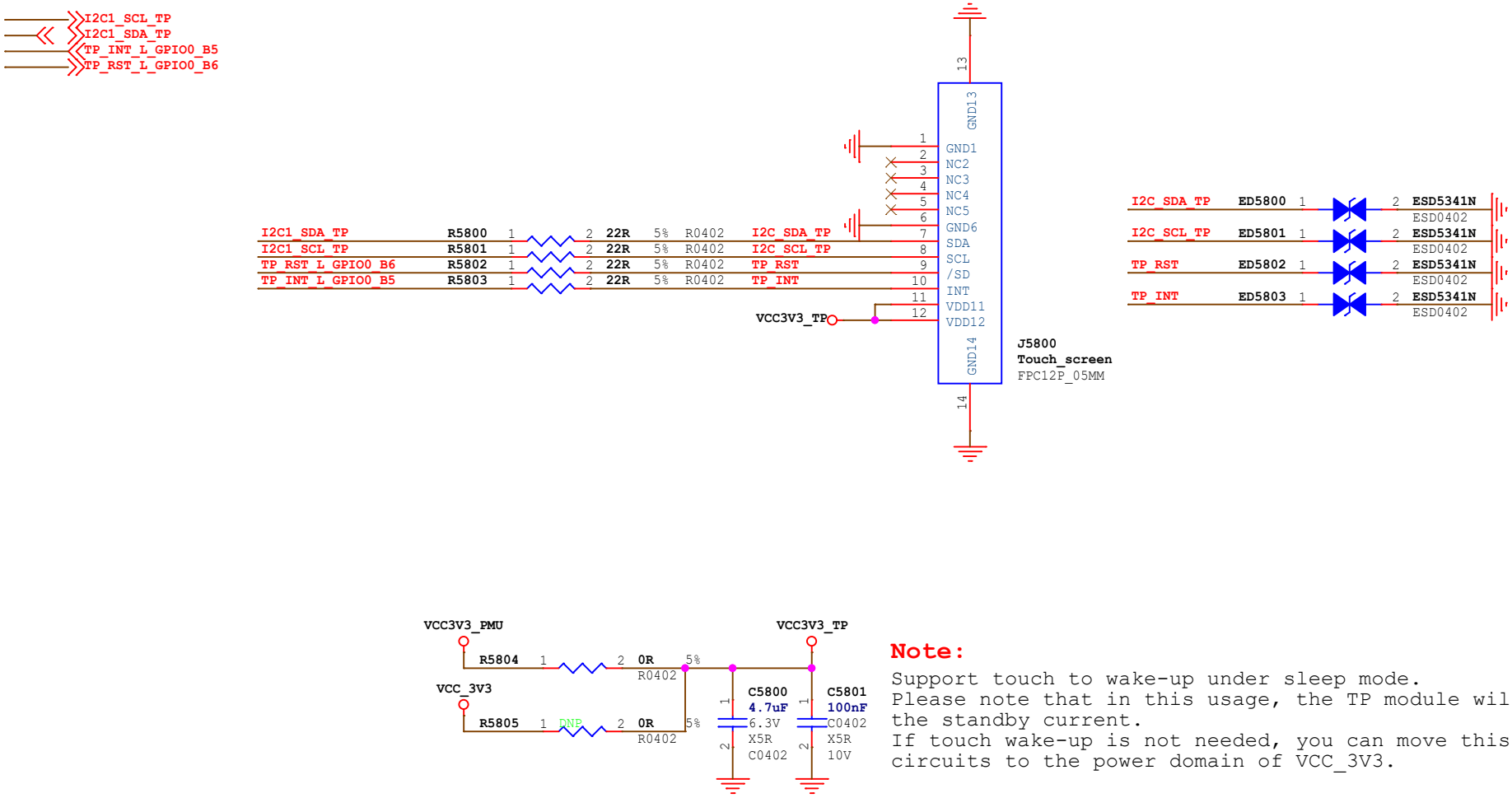

Note:

Support touch to wake-up under sleep mode.
Please note that in this usage, the TP module will increase the standby current.
If touch wake-up is not needed, you can move this circuits to the power domain of VCC_3V3.

Rockchip Confidential

Rockchip 瑞芯微电子	Rockchip Electronics Co., Ltd				
Project:	RK3568_AIoT_REF_SCH				
File:	58.TP Connector_COF				
Date:	Tuesday, September 26, 2023			Rev:	V2.0
Designed by:	Zhangdz	Reviewed by:	Default	Sheet:	47 of 72

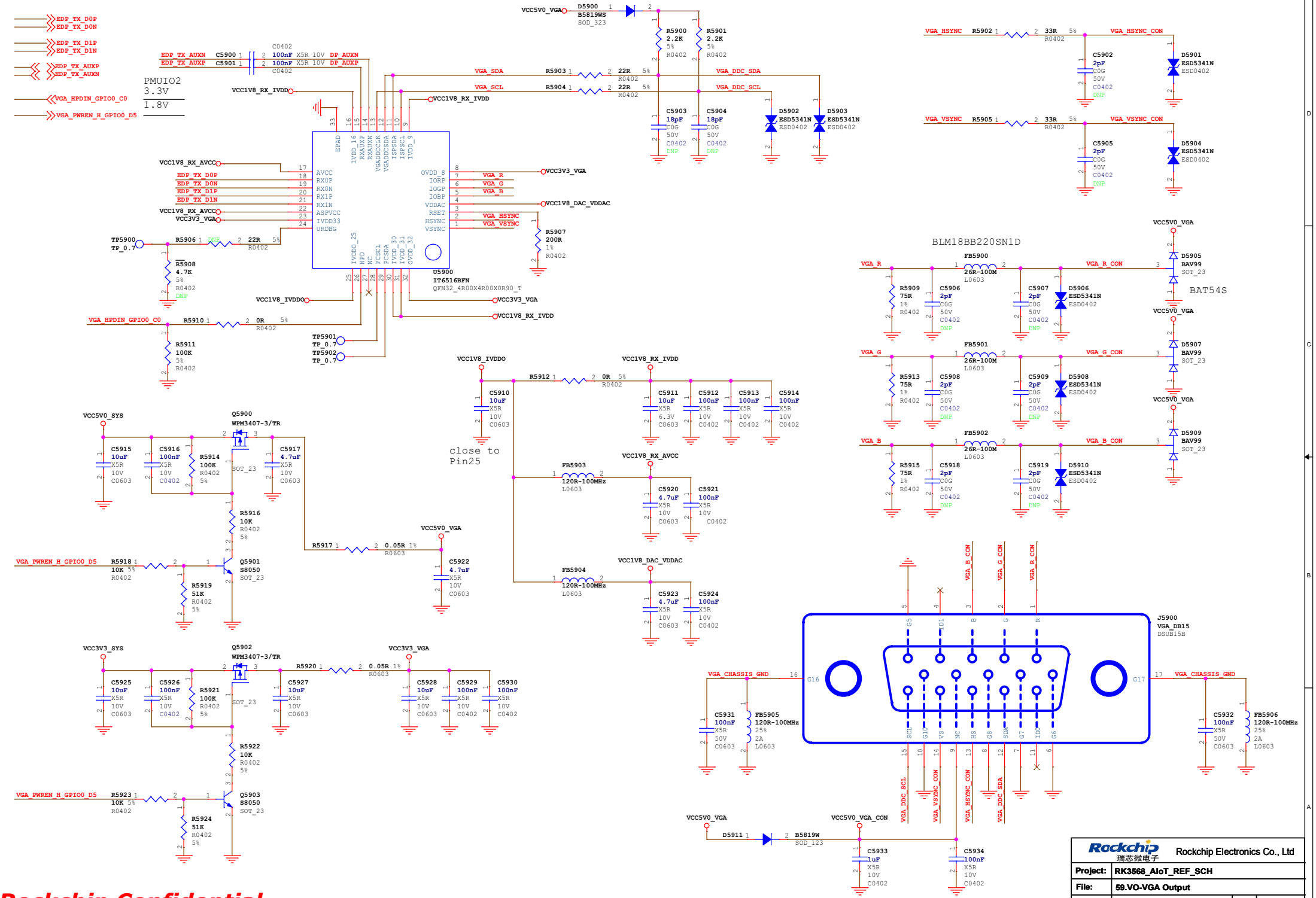
EDP_TX_D0P
EDP_TX_D0N
EDP_TX_D1P
EDP_TX_D1N
EDP_TX_AUXP
EDP_TX_AUXN
VGA_HPDIN_GPIO0_C0
VGA_PWREN_H_GPIO0_D5
PMUIO2
3.3V
1.8V
EDP_TX_AUXN C5900 100nF X5R 10V DP_AUXN
EDP_TX_AUXP C5901 100nF X5R 10V DP_AUXP
VCC1V8_RX_IVDD
VCC5V0_VGA
D5900 B5819WS SOD_323
R5900 2.2K 5% R0402
R5901 2.2K 5% R0402
VGA_SDA R5903 22R 5% R0402
VGA_SCL R5904 22R 5% R0402
VGA_DDC_SDA
VGA_DDC_SCL
C5903 18pF C0G 50V C0402 DNP
C5904 18pF C0G 50V C0402 DNP
D5902 ESD5341N ESD0402
D5903 ESD5341N ESD0402
VGA_HSYNC R5902 33R R0402
VGA_HSYNC_CON
C5902 2pF C0G 50V C0402 DNP
D5901 ESD5341N ESD0402
VGA_VSYNC R5905 33R R0402
VGA_VSYNC_CON
C5905 2pF C0G 50V C0402 DNP
D5904 ESD5341N ESD0402
VCC1V8_RX_AVCC
EDP_TX_D0P
EDP_TX_D0N
EDP_TX_D1P
EDP_TX_D1N
VCC3V3_VGA
VCC1V8_DAC_VDDAC
VGA_R
VGA_G
VGA_B
VGA_HSYNC
VGA_VSYNC
TP5900 TP_0.7
R5906 DNP 22R 5% R0402
R5908 4.7K 5% R0402 DNP
R5907 200R 1% R0402
U5900 IT6516BFN QFN32_4R00X4R00X0R90_T
VCC1V8_IVDDO
VGA_HPDIN_GPIO0_C0
R5910 0R 5% R0402
R5911 100K 5% R0402
TP5901 TP_0.7
TP5902 TP_0.7
VCC1V8_IVDDO
VCC1V8_RX_IVDD
R5912 0R 5% R0402
C5910 10uF X5R 10V C0603
C5911 10uF X5R 6.3V C0603
C5912 100nF X5R 10V C0402
C5913 100nF X5R 10V C0402
C5914 100nF X5R 10V C0402
close to Pin25
FB5903 120R-100MHz L0603
VCC1V8_RX_AVCC
C5920 4.7uF X5R 10V C0603
C5921 100nF X5R 10V C0402
FB5904 120R-100MHz L0603
VCC1V8_DAC_VDDAC
C5923 4.7uF X5R 10V C0603
C5924 100nF X5R 10V C0402
BLM18BB220SN1D
FB5900 26R-100M L0603
FB5901 26R-100M L0603
FB5902 26R-100M L0603
VGA_R_CON
VGA_G_CON
VGA_B_CON
R5909 75R 1% R0402
C5906 2pF C0G 50V C0402 DNP
C5907 2pF C0G 50V C0402 DNP
D5906 ESD5341N ESD0402
D5905 BAV99 SOT_23
BAT54S
R5913 75R 1% R0402
C5908 2pF C0G 50V C0402 DNP
C5909 2pF C0G 50V C0402 DNP
D5908 ESD5341N ESD0402
D5907 BAV99 SOT_23
R5915 75R 1% R0402
C5918 2pF C0G 50V C0402 DNP
C5919 2pF C0G 50V C0402 DNP
D5910 ESD5341N ESD0402
D5909 BAV99 SOT_23
VCC5V0_SYS
Q5900 WPM3407-3/TR
C5915 10uF X5R 10V C0603
C5916 100nF X5R 10V C0402
R5914 100K R0402 5%
C5917 4.7uF X5R 10V C0603
R5916 10K R0402 5%
R5917 0.05R 1% R0603
VCC5V0_VGA
C5922 4.7uF X5R 10V C0603
VGA_PWREN_H_GPIO0_D5
R5918 10K 5% R0402
Q5901 S8050 SOT_23
R5919 51K R0402 5%
VCC3V3_SYS
Q5902 WPM3407-3/TR
C5925 10uF X5R 10V C0603
C5926 100nF X5R 10V C0402
R5921 100K R0402 5%
C5927 10uF X5R 10V C0603
R5920 0.05R 1% R0603
VCC3V3_VGA
C5928 10uF X5R 10V C0603
C5929 100nF X5R 10V C0402
C5930 100nF X5R 10V C0402
R5922 10K R0402 5%
VGA_PWREN_H_GPIO0_D5
R5923 10K 5% R0402
Q5903 S8050 SOT_23
R5924 51K R0402 5%
J5900 VGA_DB15 DSUB15B
VGA_CHASSIS_GND
C5931 100nF X5R 50V C0603
FB5905 120R-100MHz 25% 2A L0603
C5932 100nF X5R 50V C0603
FB5906 120R-100MHz 25% 2A L0603
VGA_DDC_SCL
VGA_VSYNC_CON
VGA_HSYNC_CON
VGA_DDC_SDA
VCC5V0_VGA
D5911 B5819W SOD_123
VCC5V0_VGA_CON
C5933 1uF X5R 10V C0402
C5934 100nF X5R 10V C0402
Rockchip Confidential
Rockchip Electronics Co., Ltd
Project: RK3568_AIoT_REF_SCH
File: 59.VO-VGA Output
Date: Tuesday, September 26, 2023
Rev: V1.0
Designed by: Zhangdz
Reviewed by:
Sheet: 48 of 72

SDIO WIFI/BT MODULE

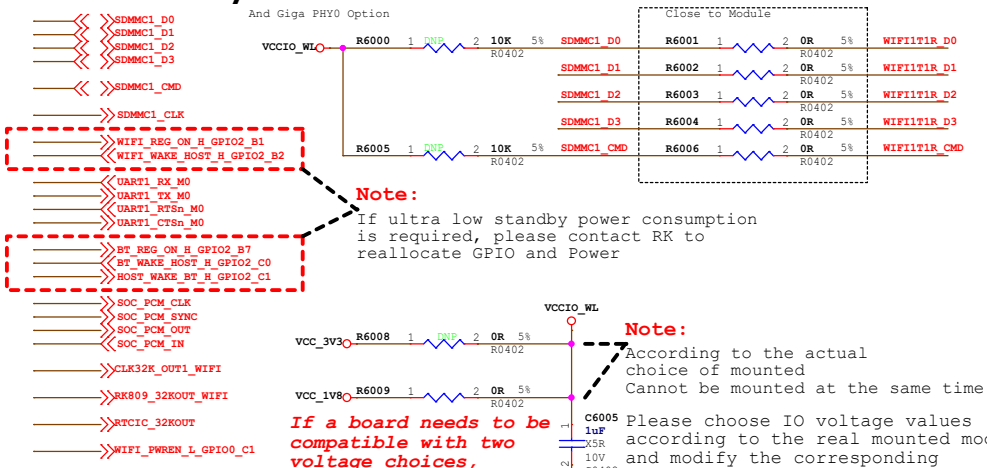

Note:
If ultra low standby power consumption is required, please contact RK to reallocate GPIO and Power

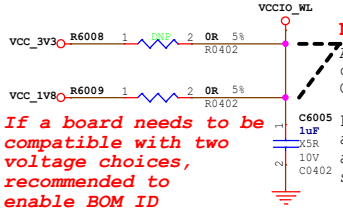

Note:
According to the actual choice of mounted
Cannot be mounted at the same time

Please choose IO voltage values according to the real mounted module and modify the corresponding software configuration.

If a board needs to be compatible with two voltage choices, recommended to enable BOM_ID

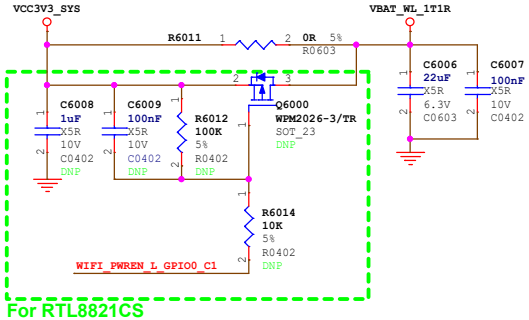

Note:
The maximum peak current is 600mA
Close to WIFI module

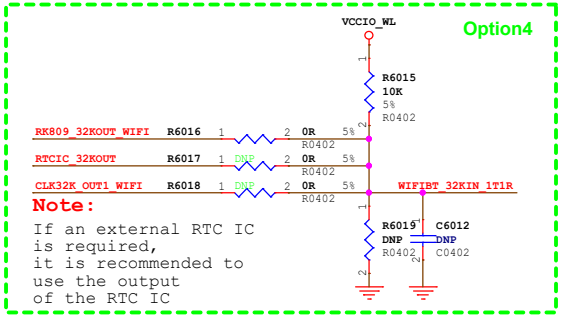

Note:
If an external RTC IC is required, it is recommended to use the output of the RTC IC

Note:
Adjusted the load capacitance according to the crystal specification.

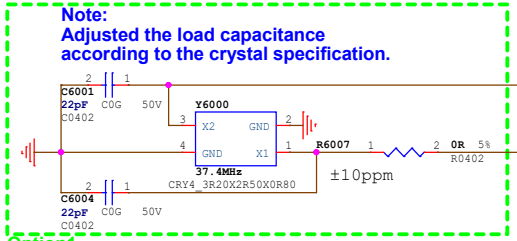

Note:
Using RTL8189ETV/FTV modules, please notice WIFI REG ON is on pin12 or pin34, choose according to the actual condition.

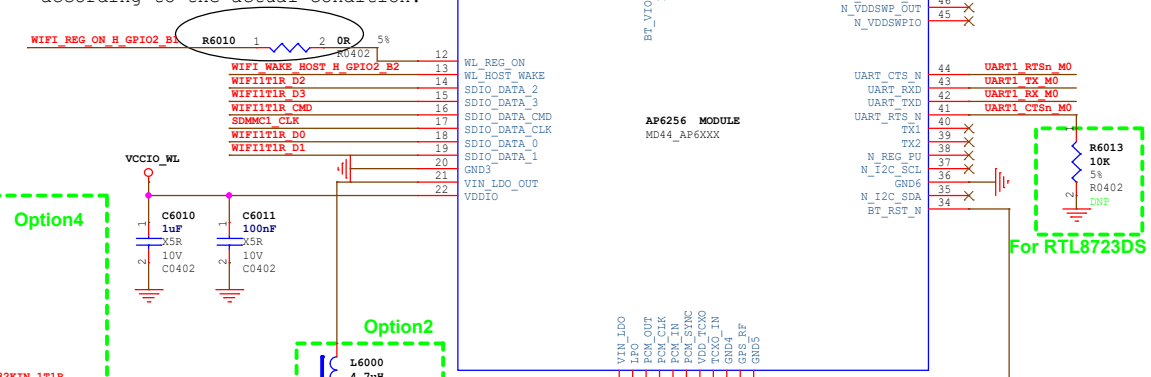

50 Ohm RF trace

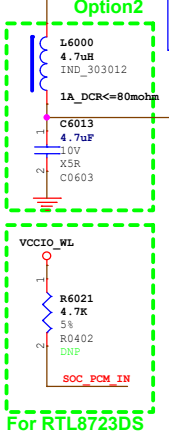

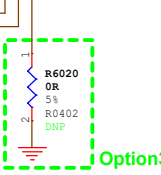

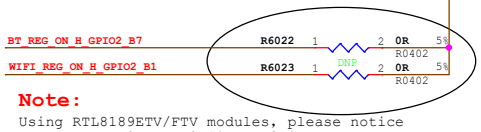

Note:
Using RTL8189ETV/FTV modules, please notice WIFI REG ON is on pin12 or pin34, choose according to the actual condition.

OPTION	WIFI				BT	Crystals	VDDIO	Option1	Option2	Option3	Option4
	a	b/g/n	ac	5GHz							
AW-CM256SM	Yes	Yes	Yes	Yes	4.2	37.4MHz	1.71-3.6V	Yes	Yes	Yes@SDIO2.0 No@SDIO3.0	Yes
AP6236/AP6212	No	Yes	No	No	4.2/4.0	26MHz	1.71-3.6V	Yes	Yes	No	Yes
AP6256/AP6255	Yes	Yes	Yes	Yes	5.0/4.2	37.4MHz	1.71-3.6V	Yes	Yes	Yes@SDIO2.0 No@SDIO3.0	Yes
RTL8189ETV Module F89FTSM12-W3	No	Yes	No	No	No	Module Integrated	1.8-3.3V	No	No	No	No
RTL8723BS Module F23BDSM23-W2	No	Yes	No	No	4.0	Module Integrated	1.62-3.6V	No	No	No	No
RTL8723DS Module 6223A-SRD	No	Yes	No	No	4.2	Module Integrated	1.62-3.6V	No	No	No	No
QCA9377 Module 8223A-SR	Yes	Yes	Yes	Yes	4.2	Module Integrated	1.7-3.45V	No	No	No	Yes
RTL8821CS Module 6221A-SRC	Yes	Yes	Yes	Yes	4.2	Module Integrated	1.7-3.45V	No	No	No	No

Note:
Yes: option circuit be mounted
No: option circuit not be mounted

Rockchip Confidential

Rockchip 瑞芯微电子	Rockchip Electronics Co., Ltd		
Project:	RK3568_AIoT_REF_SCH		
File:	60.WIFI/BT-SDMMC1_1T1R + UART		
Date:	Tuesday, September 26, 2023	Rev:	V2.0
Designed by: Zhangdz	Reviewed by: Default	Sheet:	49 of 72

SDIO WIFI/BT MODULE-2T2R

And Giga PHY0 Option

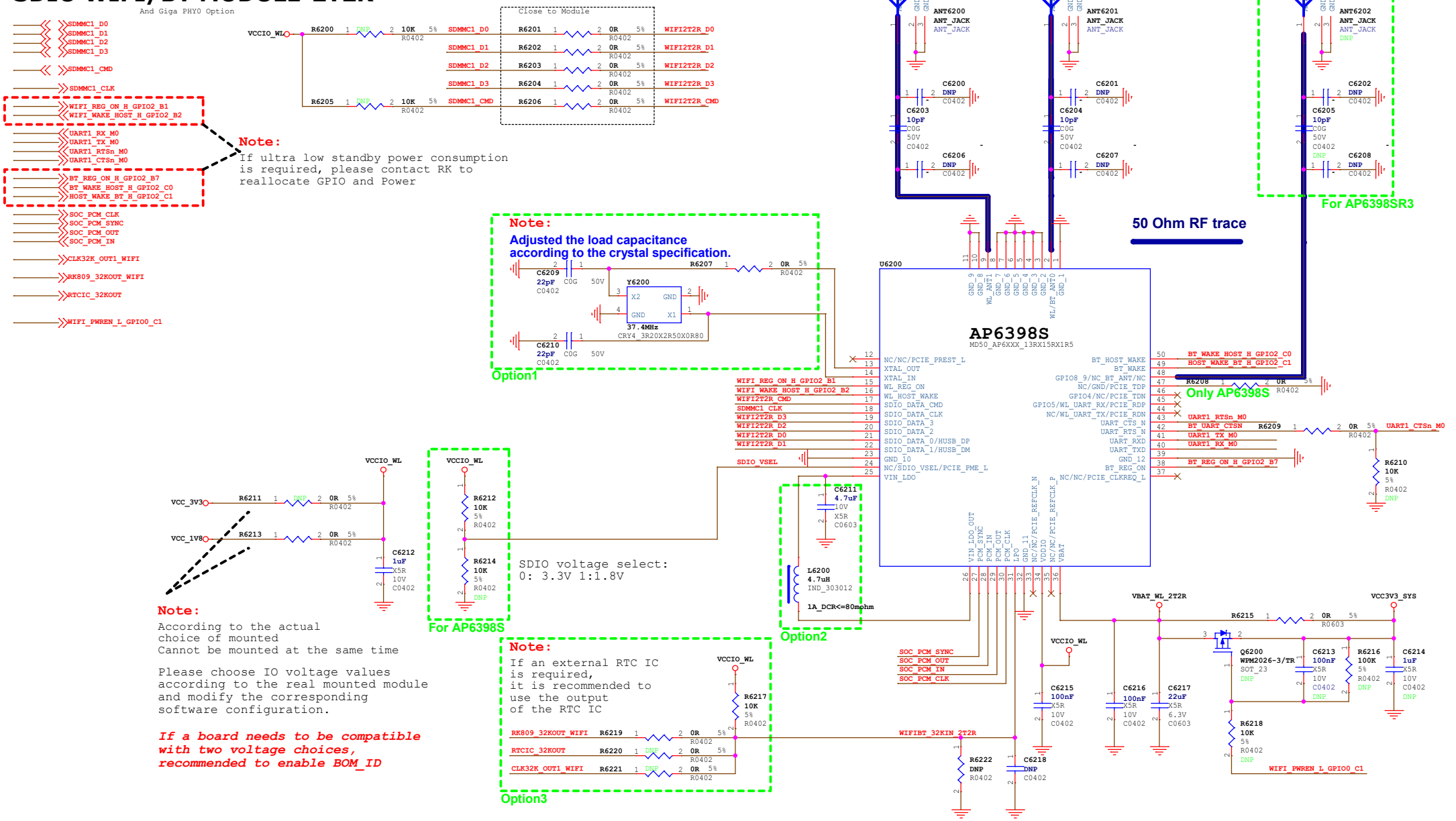

OPTION	WIFI				BT	Crystals	VDDIO	Option1	Option2	Option3
	a	b/g/n	ac	5GHz						
AP6398S	Yes	Yes	Yes	Yes	5.0	37.4MHz	1.71-3.6V	Yes	Yes	Yes
AP6356S	Yes	Yes	Yes	Yes	4.1	37.4MHz	1.71-3.6V	Yes	Yes	Yes
RTL8822BS Module	Yes	Yes	Yes	Yes	4.1	Module Integrated	1.71-3.6V	No	No	No

Note:
Yes: option circuit be mounted
No: option circuit not be mounted

Rockchip Confidential

Rockchip 瑞芯微电子	Rockchip Electronics Co., Ltd		
Project:	RK3568_AIoT_REF_SCH		
File:	62.WIFI/BT-SDMMC1_2T2R + UART		
Date:	Tuesday, September 26, 2023	Rev:	V2.0
Designed by: Zhangdz	Reviewed by: Default	Sheet:	50 of 72

PCIe WIFI6/BT MODULE-2T2R

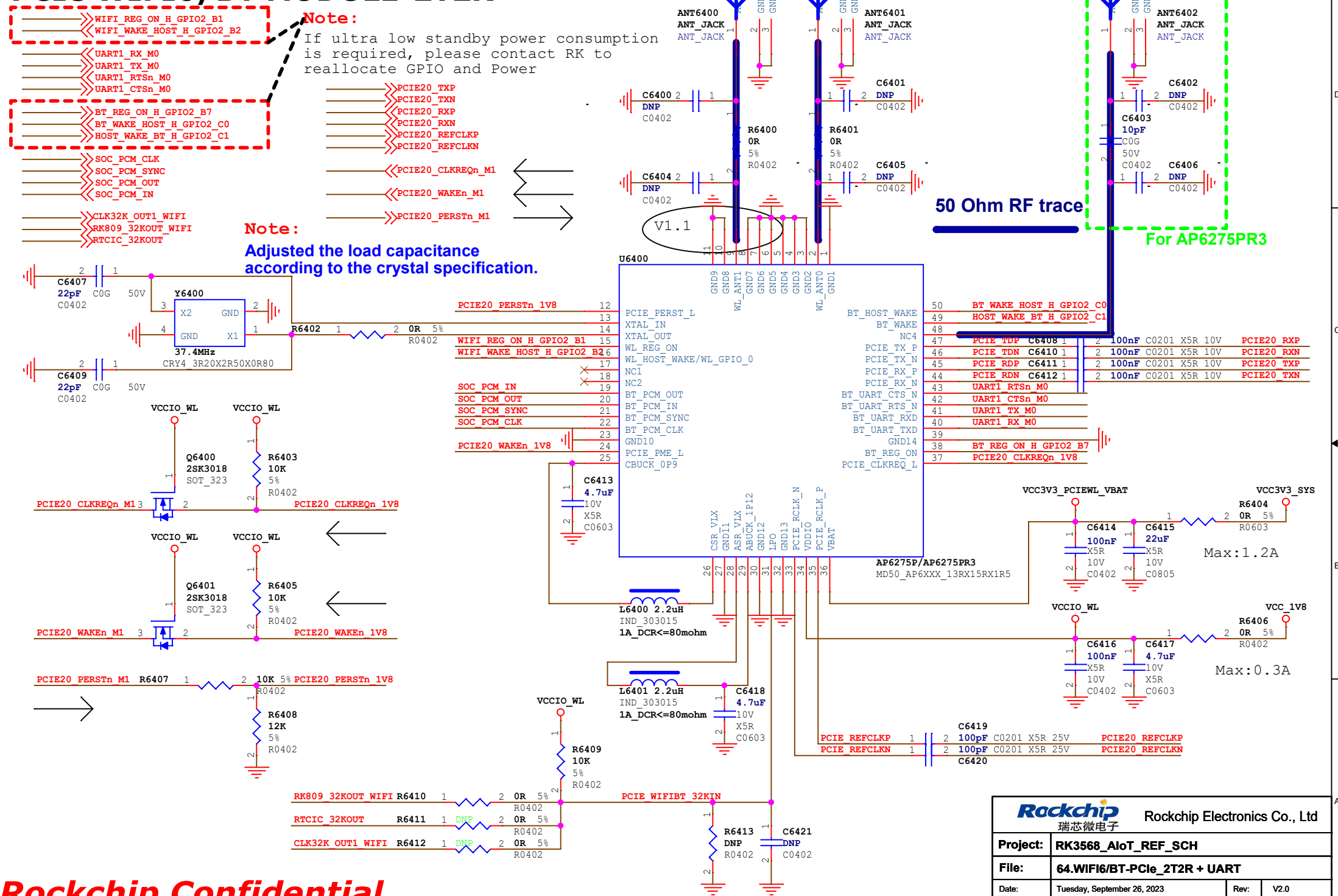

Rockchip Confidential

Rockchip 瑞芯微电子	Rockchip Electronics Co., Ltd		
Project:	RK3568_AIoT_REF_SCH		
File:	64.WIFI6/BT-PCIe_2T2R + UART		
Date:	Tuesday, September 26, 2023	Rev:	V2.0
Designed by: Zhangdz	Reviewed by: Default	Sheet:	51 of 72

FE PHY0

And SDIO WIFI Option

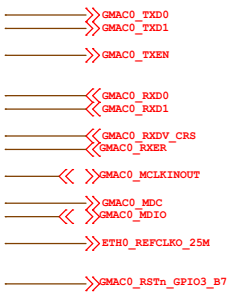

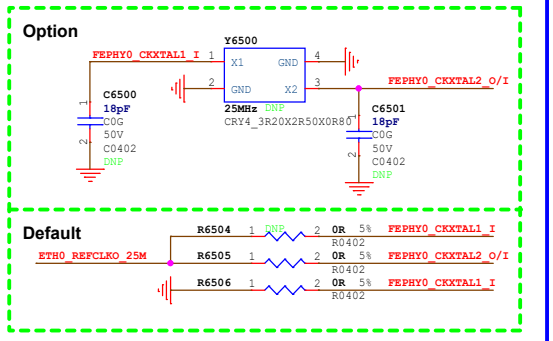

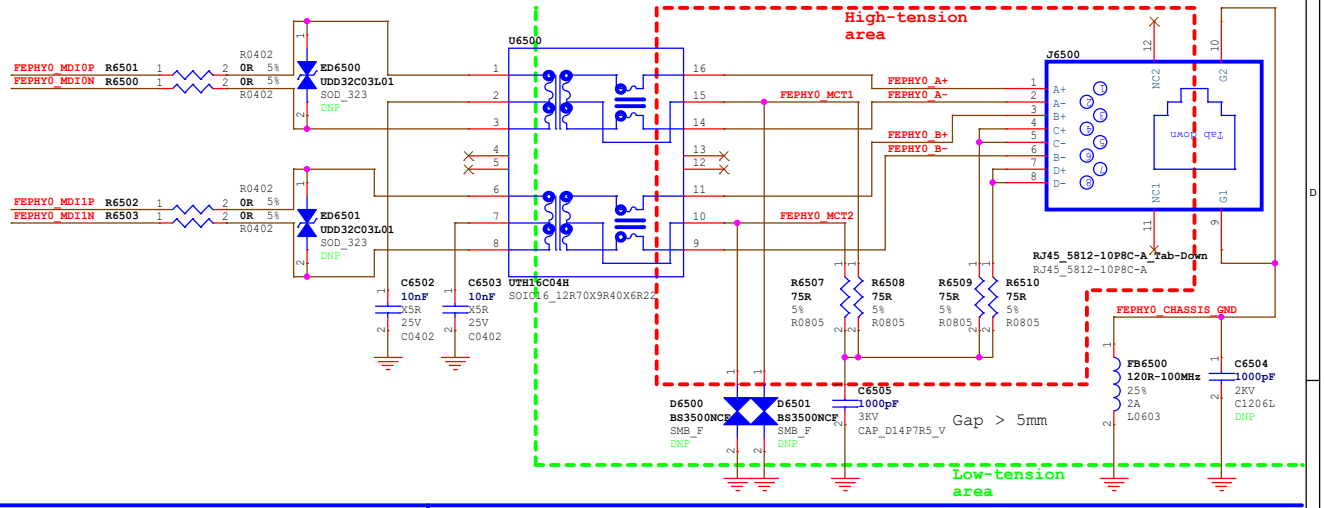

Note:

RTL8201F/YT8512C only support 3.3V IO
VCCIO4 must be changed to 3.3V power supply

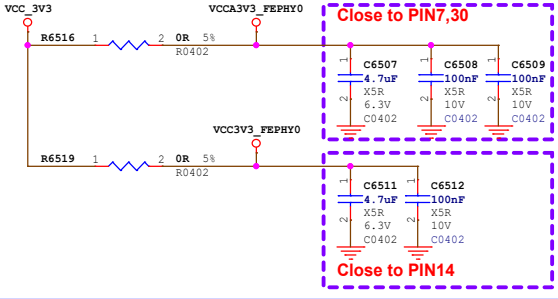

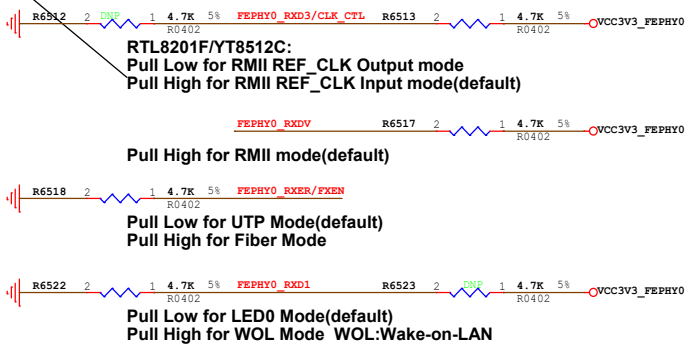

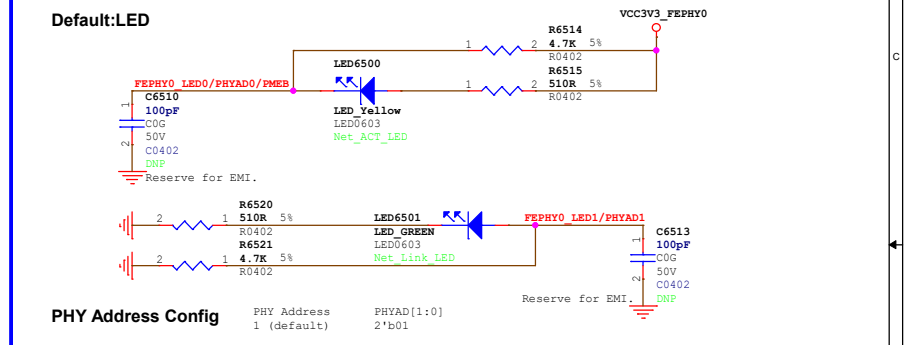

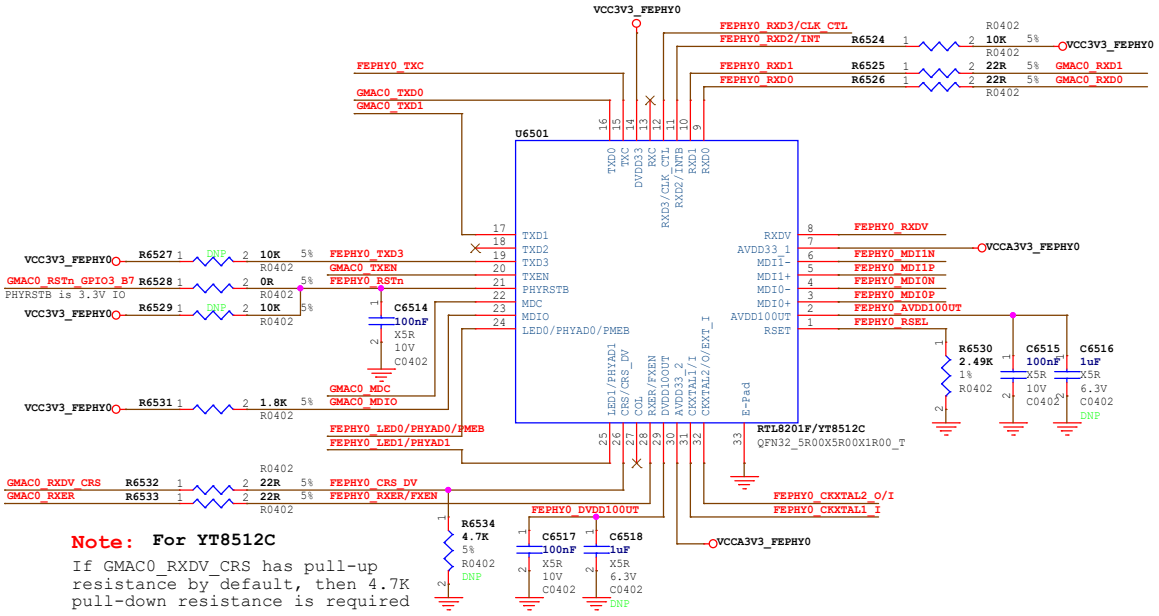

Note: For YT8512C

If GMAC0_RXDV_CRS has pull-up resistance by default, then 4.7K pull-down resistance is required

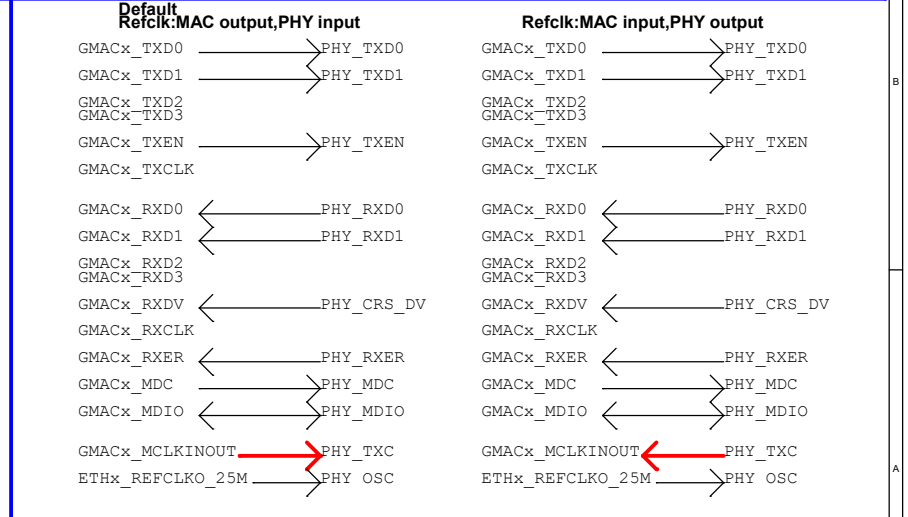

Rockchip Confidential

Rockchip 瑞芯微电子	Rockchip Electronics Co., Ltd				
Project:	RK3568_AIoT_REF_SCH				
File:	65.Ethernet-FEPHY_RMII0				
Date:	Tuesday, September 26, 2023			Rev:	V2.0
Designed by:	Zhangdz	Reviewed by:	Default	Sheet:	52 of 72

Giga PHY0

And SDIO WIFI Option

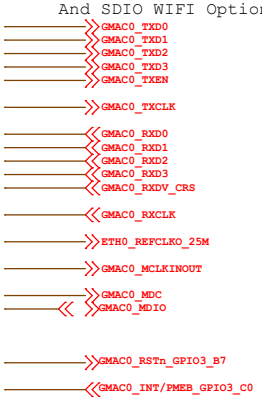

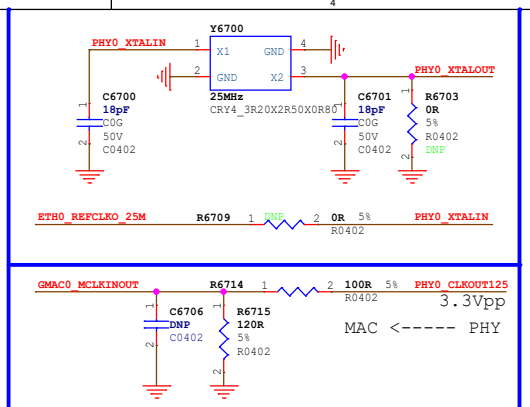

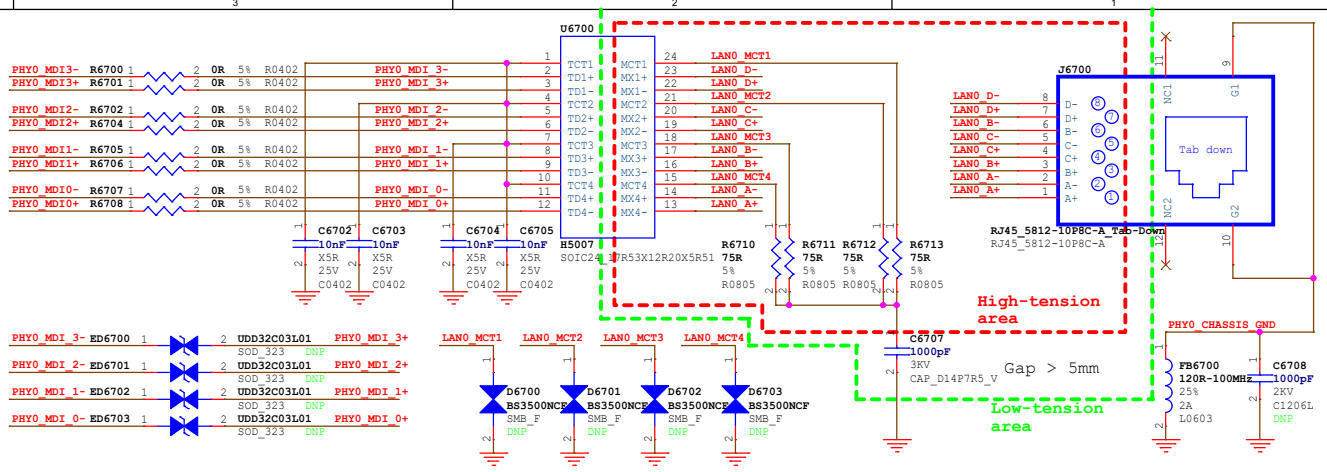

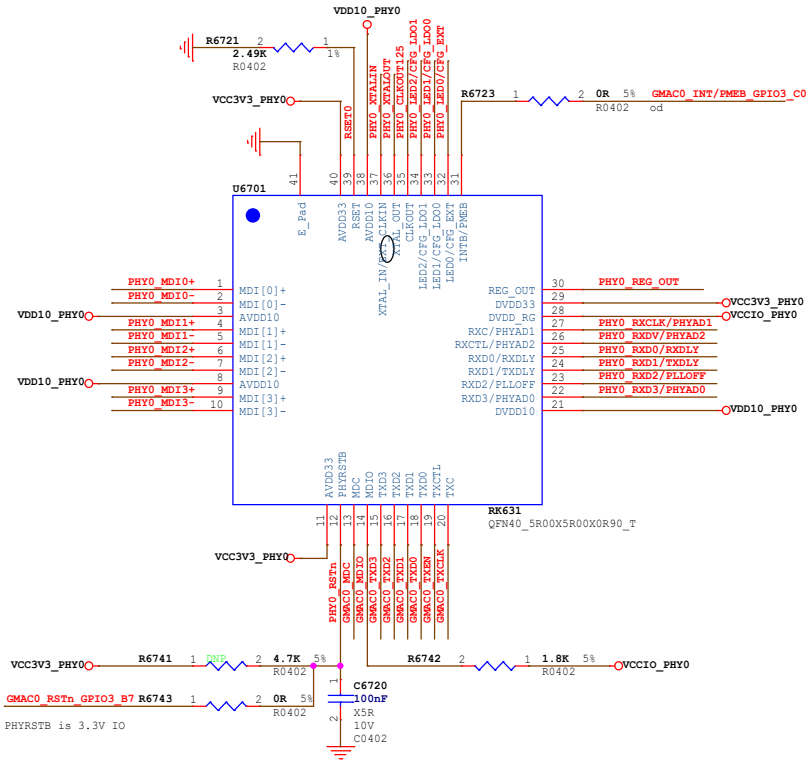

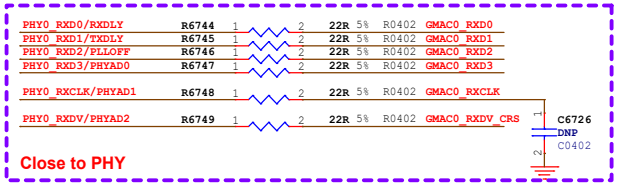

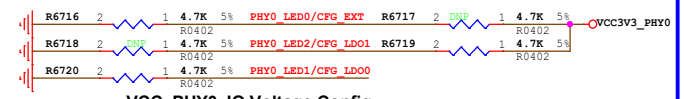

VCC_PHY0_IO Voltage Config

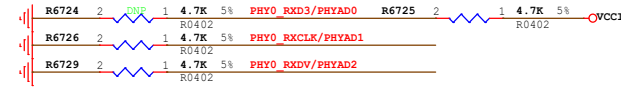

PHY Address Config

PHY Address	PHYAD[2:0]
1 (default)	3'b001

Pull-up for additional 2ns delay to RXC for data latching

Pull-up for additional 2ns delay to TXC for data latching

Pull-up to disable PLL @ ALDPS mode(Low power mode)

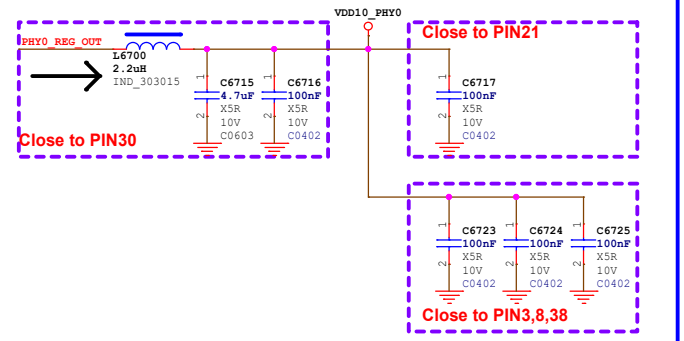

RGMII Power Source	CFG_EXT	CFG_LDO[1:0]	
External 3.3V	1'b1	2'b00	
External 1.8V	1'b1	2'b10	
Internal 1.8V (default)	1'b0	2'b10	

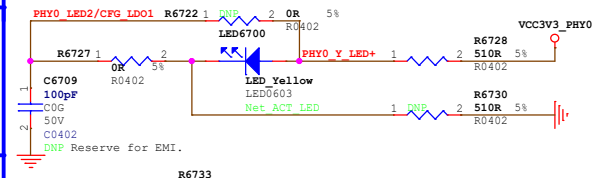

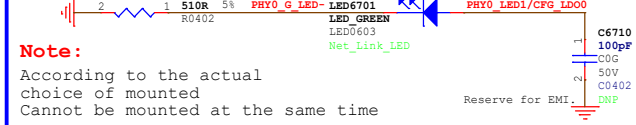

Note:

According to the actual choice of mounted
Cannot be mounted at the same time

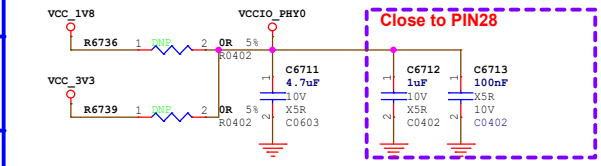

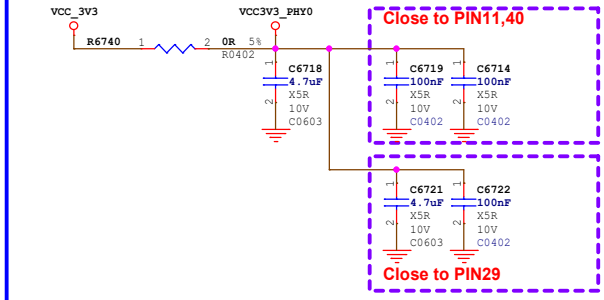

Rockchip Confidential

Rockchip 瑞芯微电子	Rockchip Electronics Co., Ltd		
Project:	RK3568_AIoT_REF_SCH		
File:	67.Ethernet-GEPHY_RGMII0		
Date:	Tuesday, September 26, 2023	Rev:	V1.0
Designed by: Zhangdz	Reviewed by:	Sheet:	53 of 72

Giga PHY1

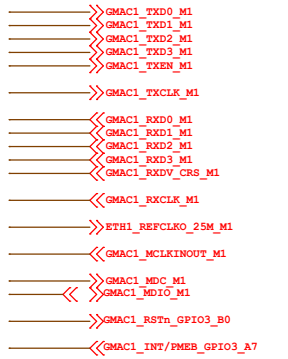

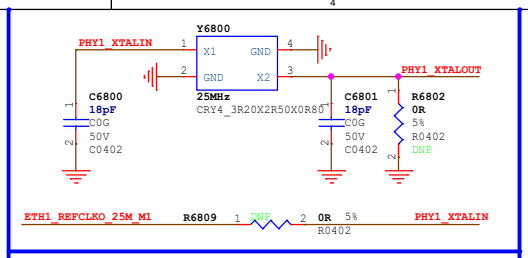

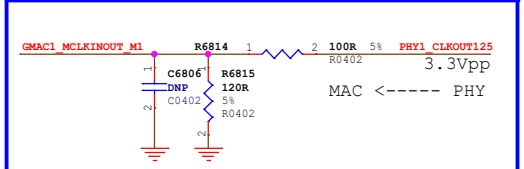

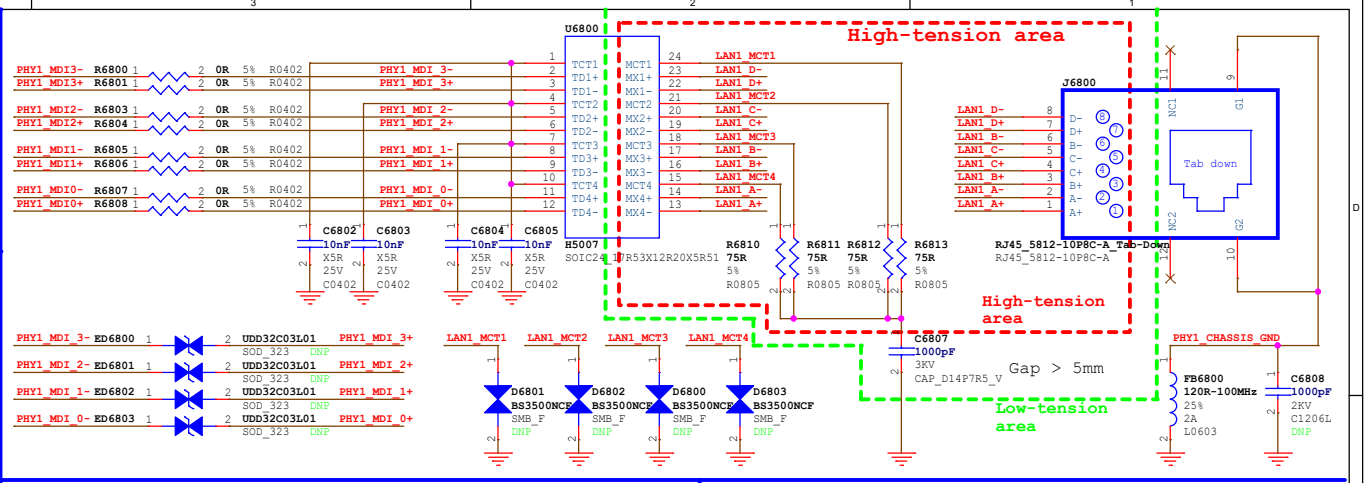

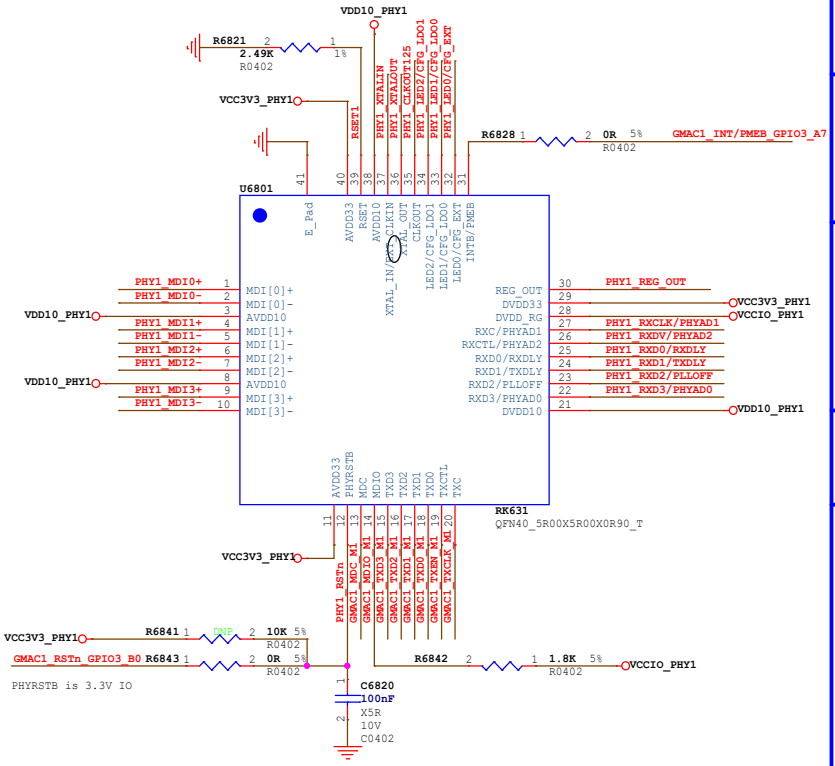

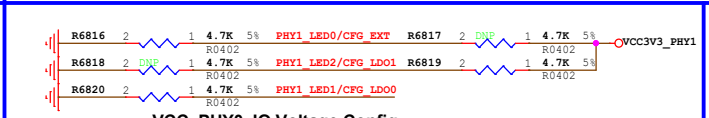

VCC_PHY0_IO Voltage Config

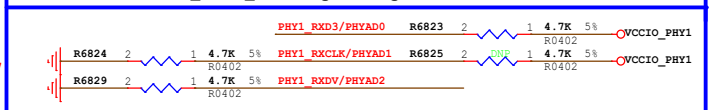

PHY Address Config

PHY Address	PHYAD[2:0]
1 (default)	3'b001

Pull-up for additional 2ns delay to RXC for data latching

Pull-up for additional 2ns delay to TXC for data latching

Pull-up to disable PLL @ ALDPS mode(Low power mode)

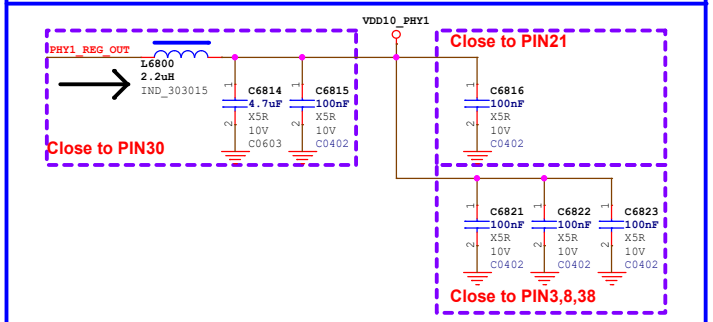

RGMII Power Source	CFG_EXT	CFG_LDO[1:0]	
External 3.3V	1'b1	2'b00	
External 1.8V	1'b1	2'b10	
Internal 1.8V(default)	1'b0	2'b10	

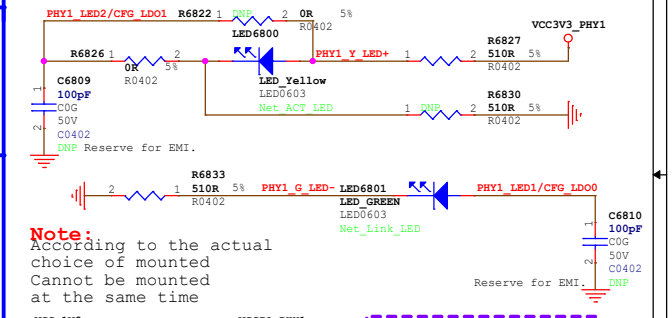

Note:
According to the actual choice of mounted Cannot be mounted at the same time

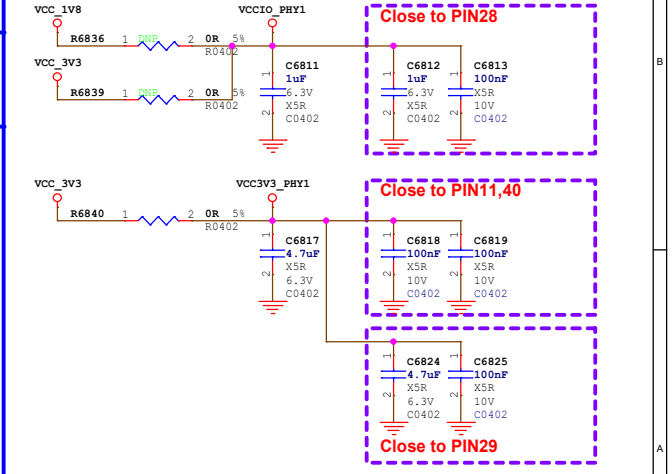

Rockchip Confidential

Rockchip 瑞芯微电子	Rockchip Electronics Co., Ltd		
Project:	RK3568_AIoT_REF_SCH		
File:	68.Ethernet-GEPHY_RGMII1_M1		
Date:	Tuesday, September 26, 2023	Rev:	V1.0
Designed by: Zhangdz	Reviewed by:	Sheet:	54 of 72

PCIE Ethernet

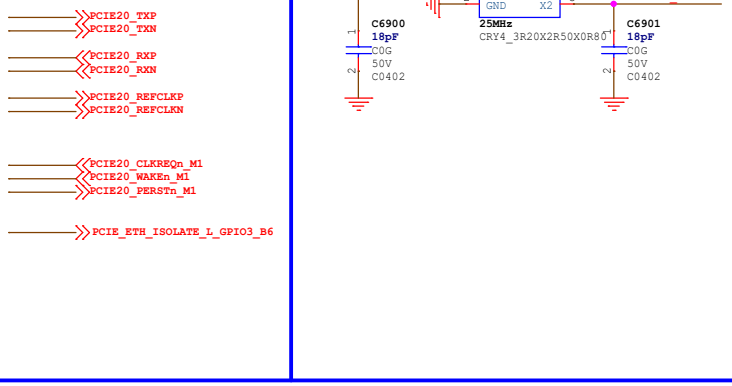

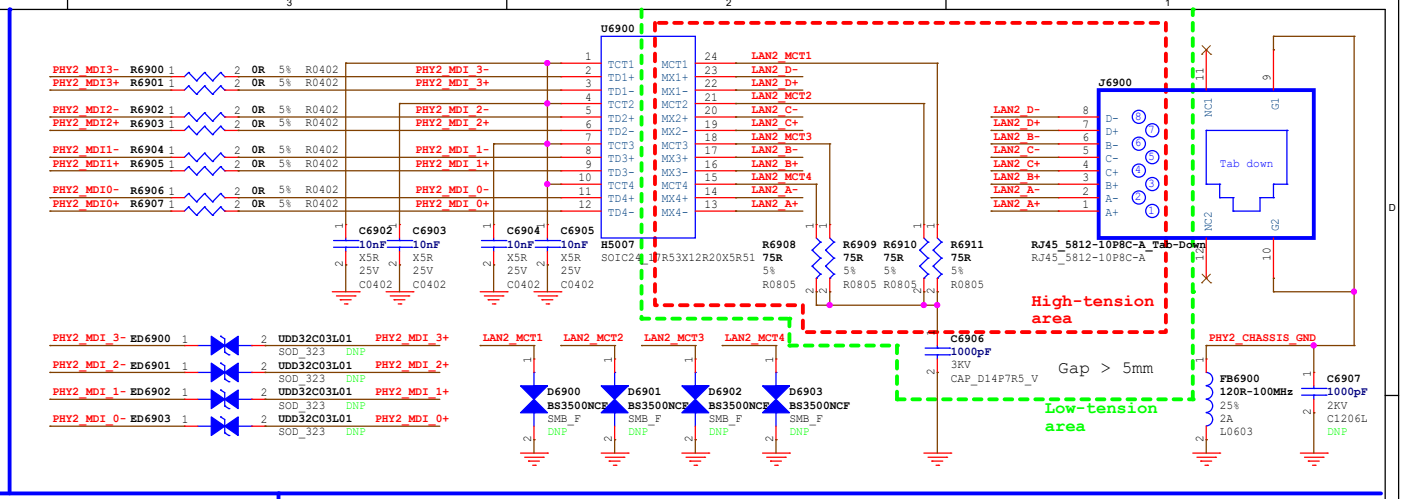

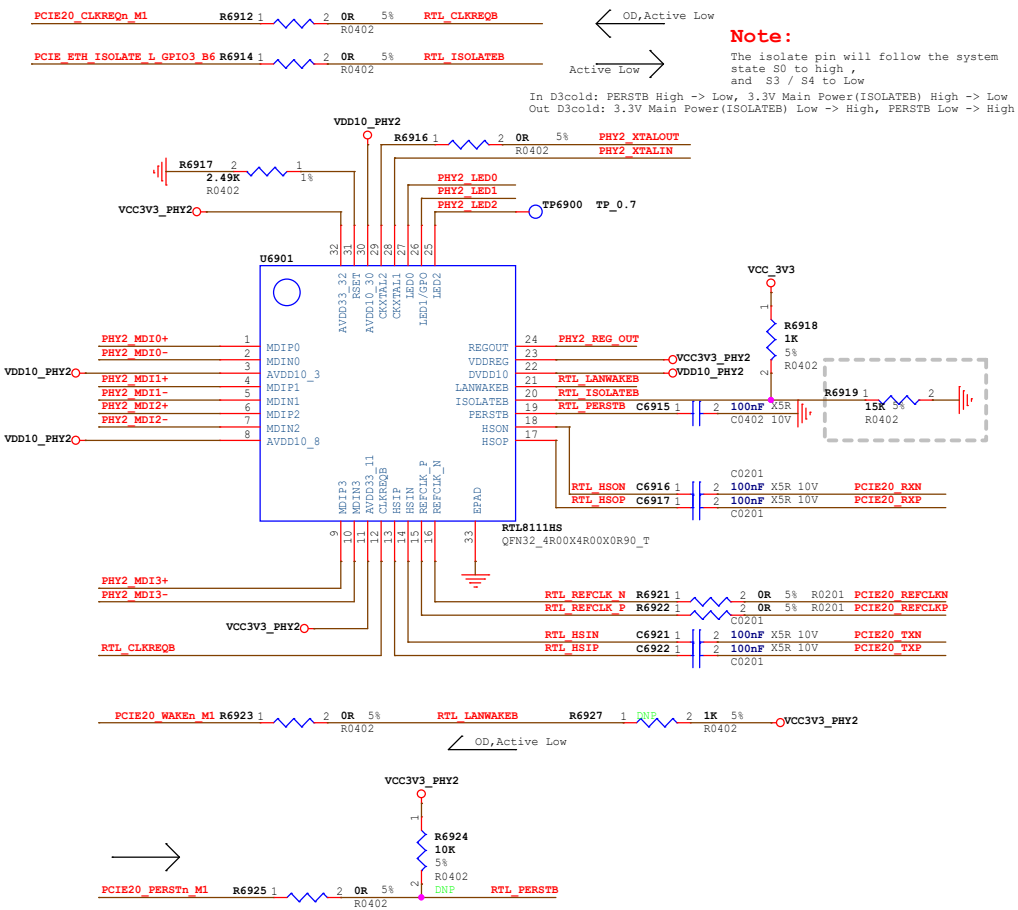

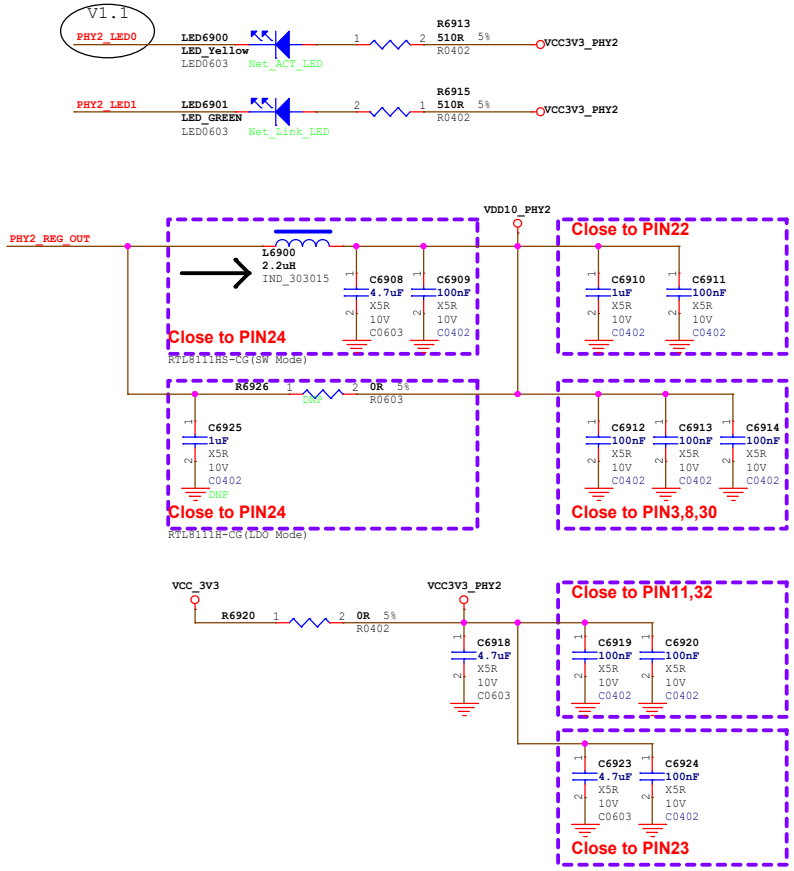

Rockchip Confidential

Rockchip 瑞芯微电子	Rockchip Electronics Co., Ltd		
Project:	RK3568_AIoT_REF_SCH		
File:	69.Ethernet-PCIE Ethernet		
Date:	Tuesday, September 26, 2023	Rev:	V2.0
Designed by: Zhangdz	Reviewed by: Default	Sheet:	55 of 72

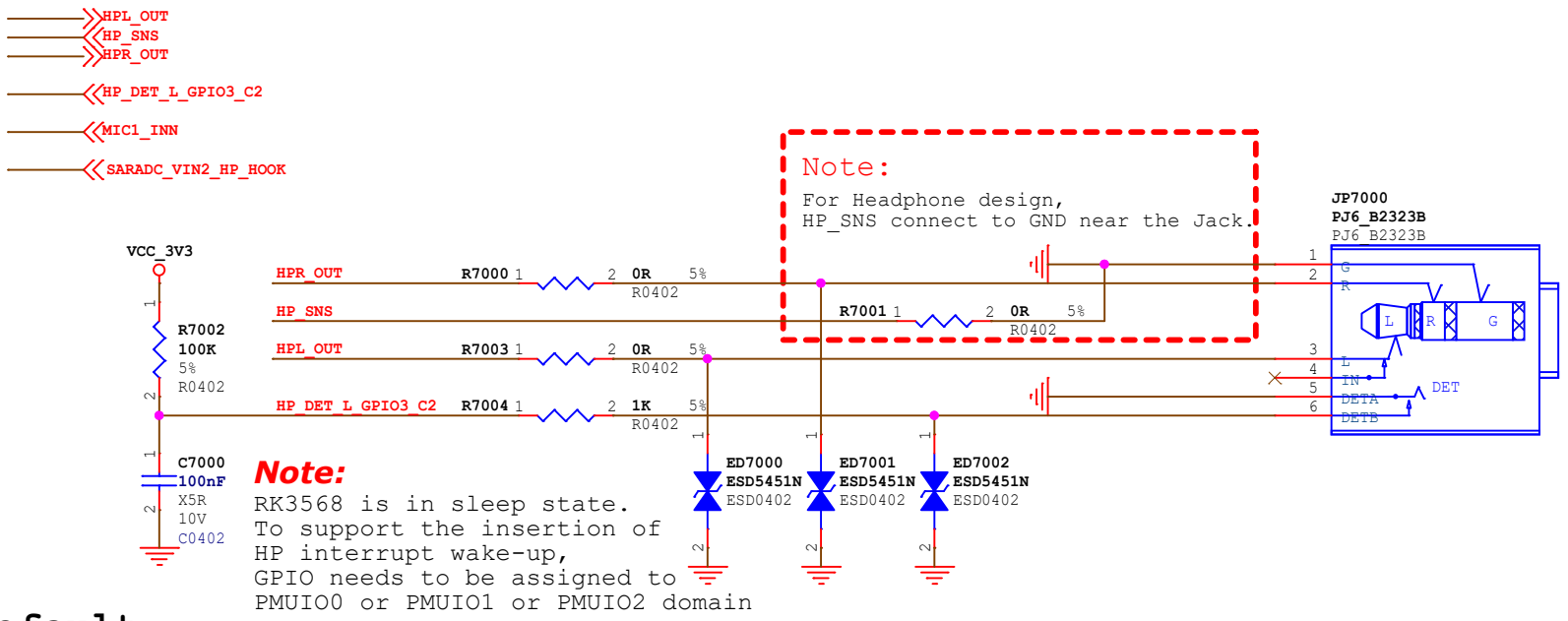

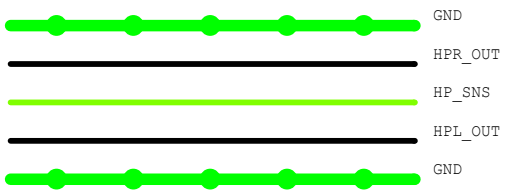

Layout note:

Place 0ohm resister close to GND pin of Headphone Jack ,
at layout,HP_SNS walks in the middle of HPL/HPR and acts as an accompanying line to avoid interference.

Default
Headphone Jack(3-pole with DET)

Headphone Jack(4-pole with DET & MIC)
Option

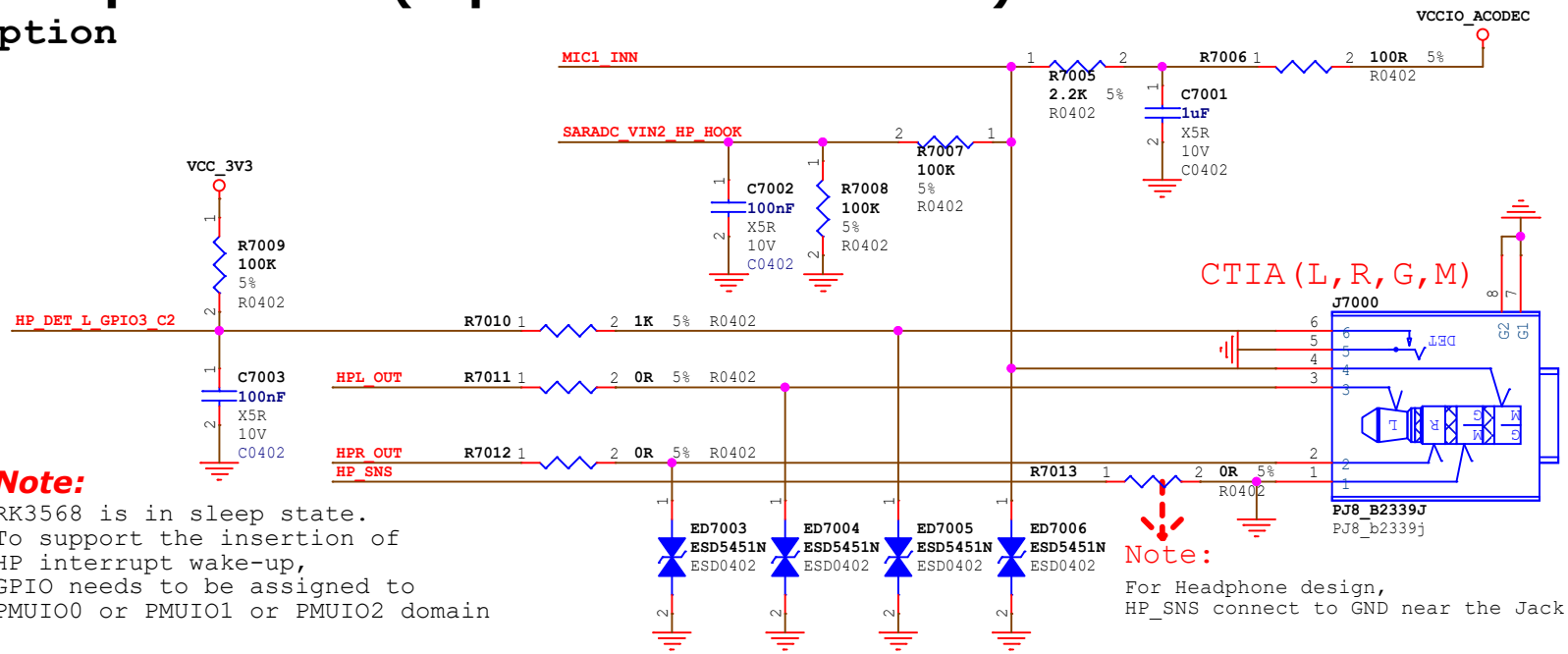

Layout note:

Place 0ohm resister close to GND pin of Headphone Jack ,
at layout,HP_SNS walks in the middle of HPL/HPR and acts as an accompanying line to avoid interference.

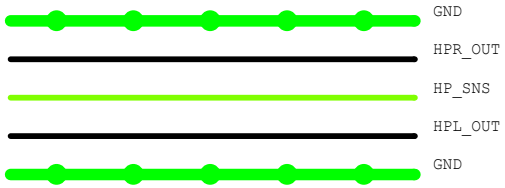

Rockchip Confidential

Rockchip 瑞芯微电子	Rockchip Electronics Co., Ltd				
Project:	RK3568_AIoT_REF_SCH				
File:	70.Audio-Headphone Port				
Date:	Tuesday, September 26, 2023			Rev:	V2.0
Designed by:	Zhangdz	Reviewed by:	Default	Sheet:	56 of 72

SPKN_OUT
SPKP_OUT

MIC1_INP
MIC1_INN

Default
MIC for 3-pole Headphone Jack

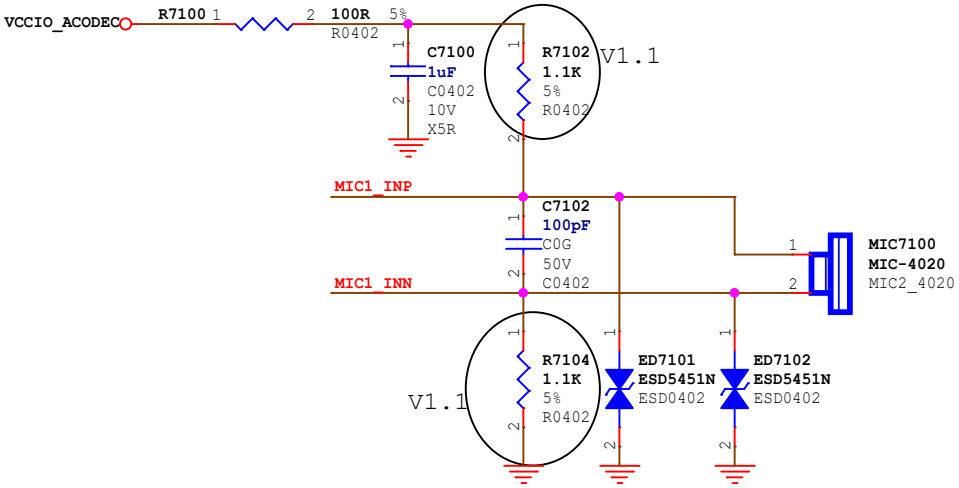

Option
MIC for 4-pole Headphone Jack

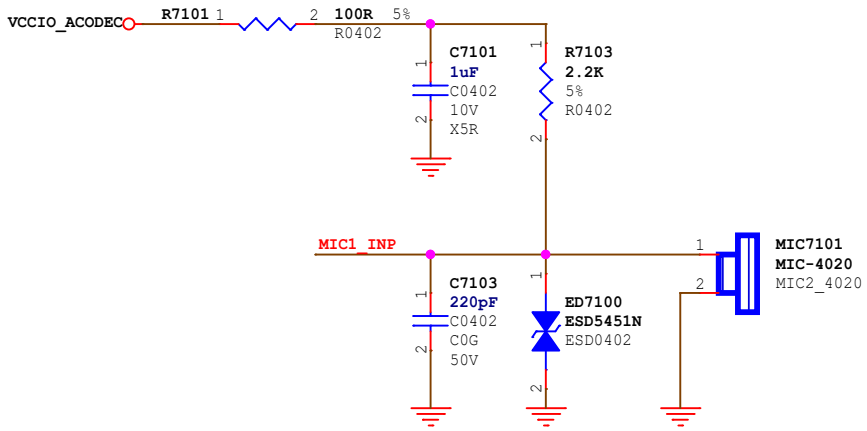

SPK

Note:8ohm/1.3W
Speaker Output

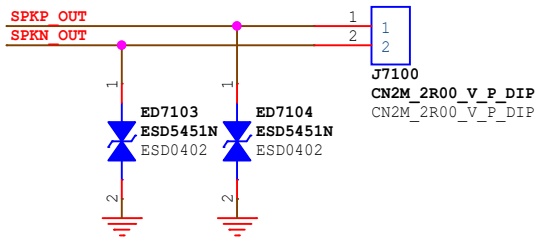

Rockchip Confidential

Rockchip 瑞芯微电子	Rockchip Electronics Co., Ltd				
Project:	RK3568_AIoT_REF_SCH				
File:	71.Audio-SingleMic+RK809_SPK				
Date:	Tuesday, September 26, 2023			Rev:	V2.0
Designed by:	Zhangdz	Reviewed by:	Default	Sheet:	57 of 72

MicArray

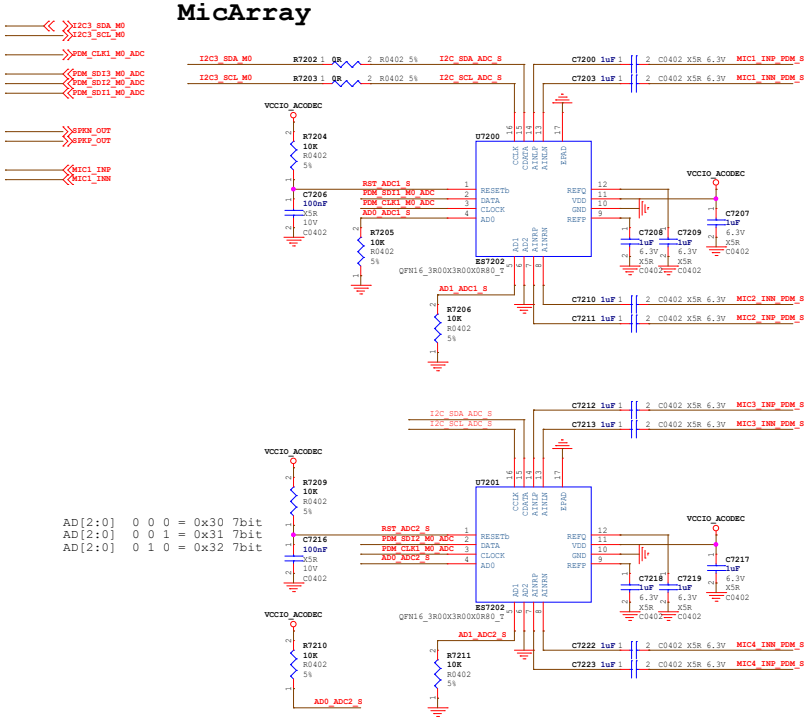

AD[2:0] 0 0 0 = 0x30 7bit
AD[2:0] 0 0 1 = 0x31 7bit
AD[2:0] 0 1 0 = 0x32 7bit

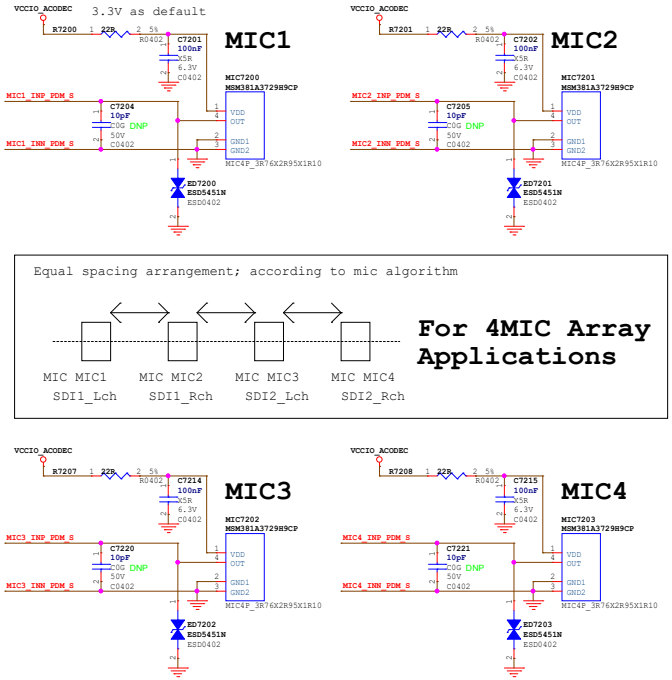

Equal spacing arrangement; according to mic algorithm

For 4MIC Array Applications

Equal spacing arrangement; according to mic algorithm

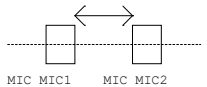

For 2MIC Array Applications

Option1

Loopback for Mono Speaker

(External ADC, better performance)

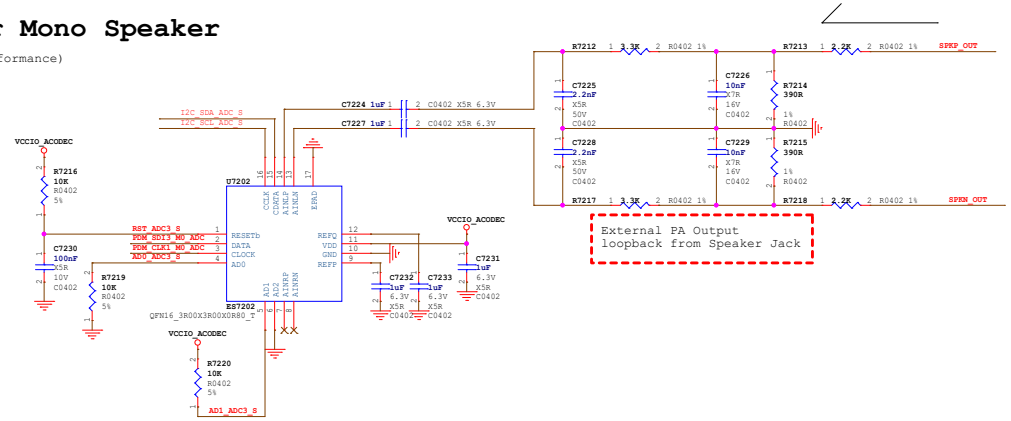

RK809-5 SPK

Note:8ohm/1.3W
Speaker Output

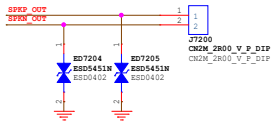

Option2

Loopback for Mono Speaker

(Available while No MIC is connected to RK809-5)
(cost-effective)

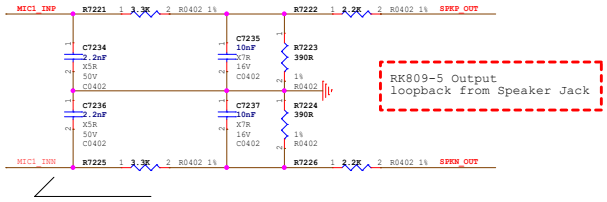

Rockchip Confidential

Rockchip 瑞芯微电子	Rockchip Electronics Co., Ltd		
Project:	RK3568_AIoT_REF_SCH		
File:	72.Audio-MicArray+RK809_SPK		
Date:	Tuesday, September 26, 2023	Rev:	V2.0
Designed by: Zhangtz	Reviewed by: Default	Sheet:	58 of 72

MicArray

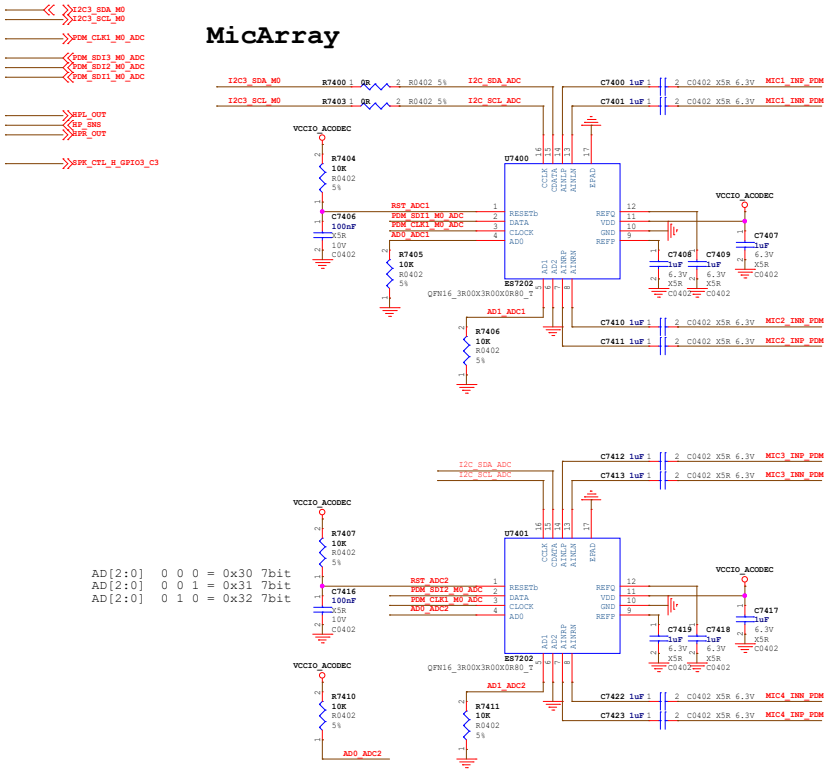

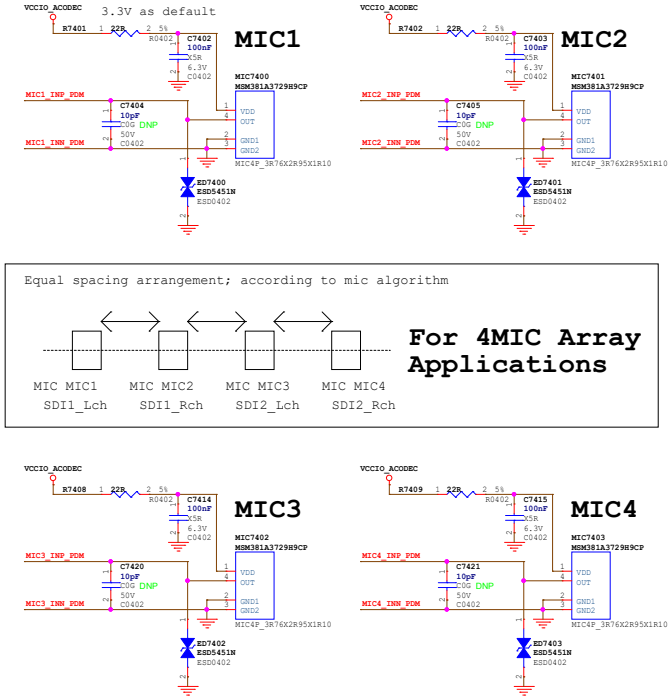

Loopback for Dual Speakers

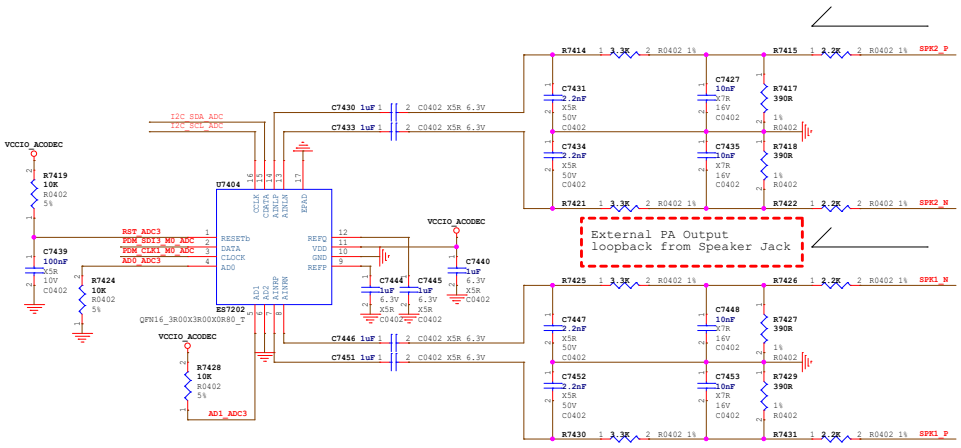

Speaker Output

Note:4ohm/3W

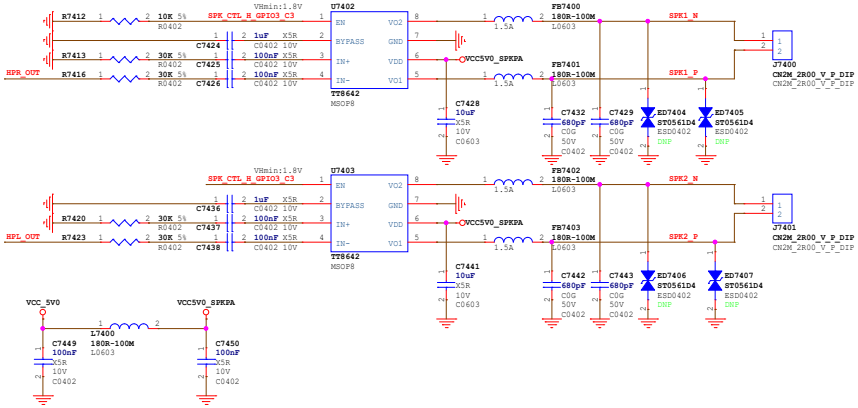

Layout note:

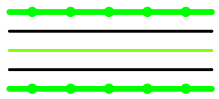

For NO Headphone design,
HP_SNS connect to GND near the PMIC.

Rockchip 瑞芯微电子	Rockchip Electronics Co., Ltd		
Project:	RK3568_AIoT_REF_SCH		
File:	74.Audio-MicArray+EXT Dual_SPK		
Date:	Tuesday, September 26, 2023	Rev:	V2.0
Designed by: Zhangtz	Reviewed by: Default	Sheet:	59 of 72

Rockchip Confidential

SATA0_TXP
SATA0_TXN
SATA0_RXP
SATA0_RXN
SATA1_TXP
SATA1_TXN
SATA1_RXP
SATA1_RXN
SATA2_TXP
SATA2_TXN
SATA2_RXP
SATA2_RXN
SATA0_ACT_LED
SATA1_ACT_LED
SATA2_ACT_LED

SATA3.0 Port0 Option

And USB3 OTG0 option, Can support SATA0+USB2 OTG0

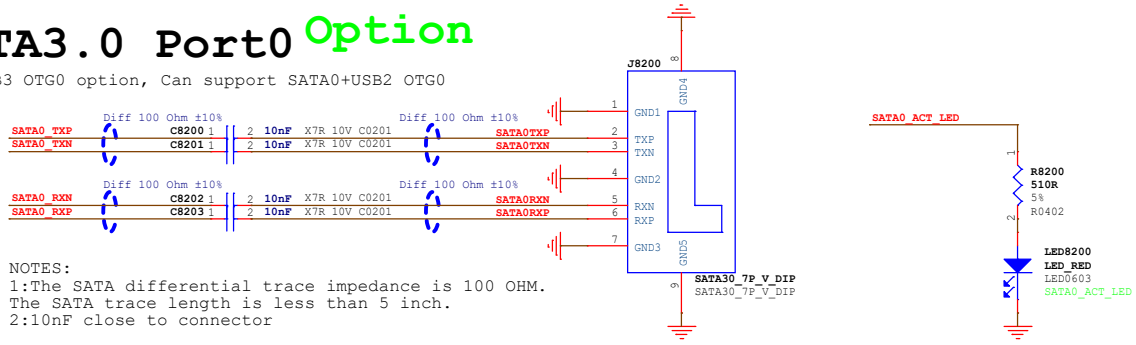

NOTES:
1:The SATA differential trace impedance is 100 OHM.
The SATA trace length is less than 5 inch.
2:10nF close to connector

SATA3.0 Port1 Option

And USB3 HOST1 option, Can support SATA1+USB2 HOST1

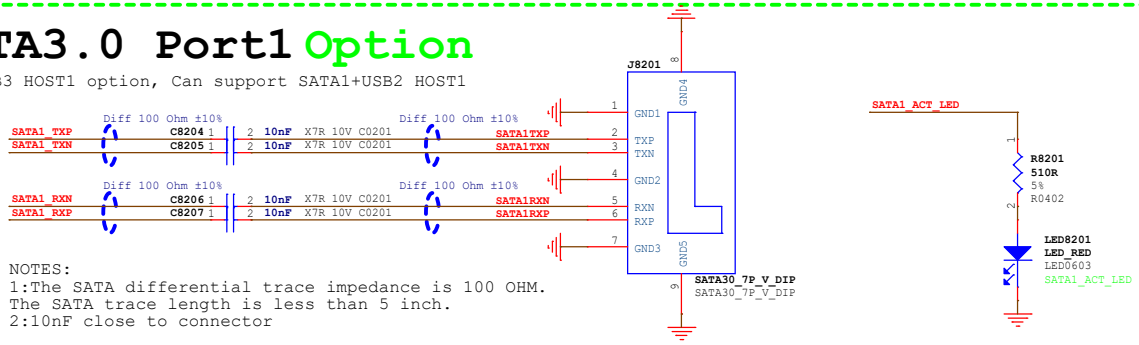

NOTES:
1:The SATA differential trace impedance is 100 OHM.
The SATA trace length is less than 5 inch.
2:10nF close to connector

SATA3.0 Port2

And PCIe2.0 option

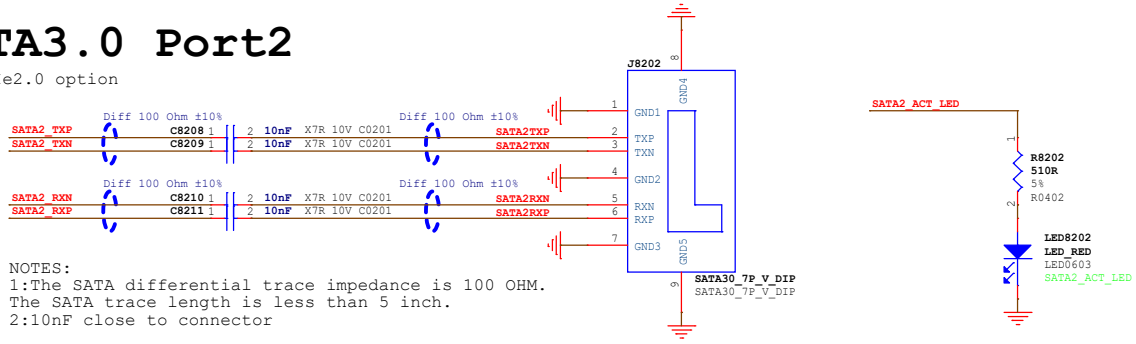

NOTES:
1:The SATA differential trace impedance is 100 OHM.
The SATA trace length is less than 5 inch.
2:10nF close to connector

SATA Power

The current is estimated according to the actual number of SATA
High power switching separate power supply is recommended for more than 2

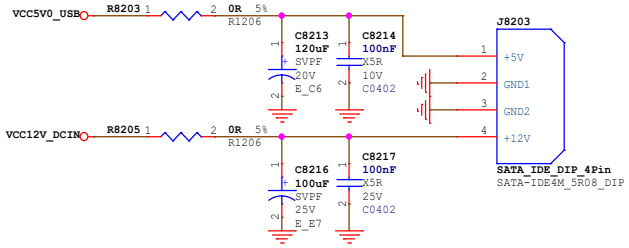

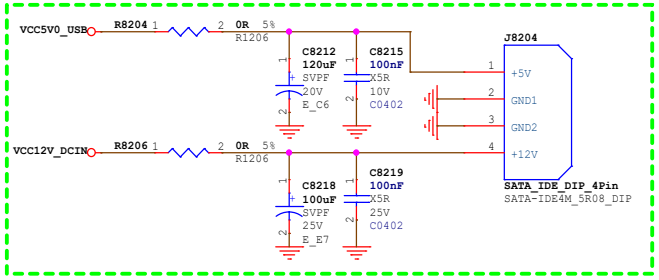

Option

Rockchip Confidential

Rockchip 瑞芯微电子	Rockchip Electronics Co., Ltd				
Project:	RK3568_AIoT_REF_SCH				
File:	82.SATA-SATA3.0 Slot_7P				
Date:	Tuesday, September 26, 2023			Rev:	V2.0
Designed by:	Zhangdz	Reviewed by:	Default	Sheet:	60 of 72

PCIe2.0 x1 Slot

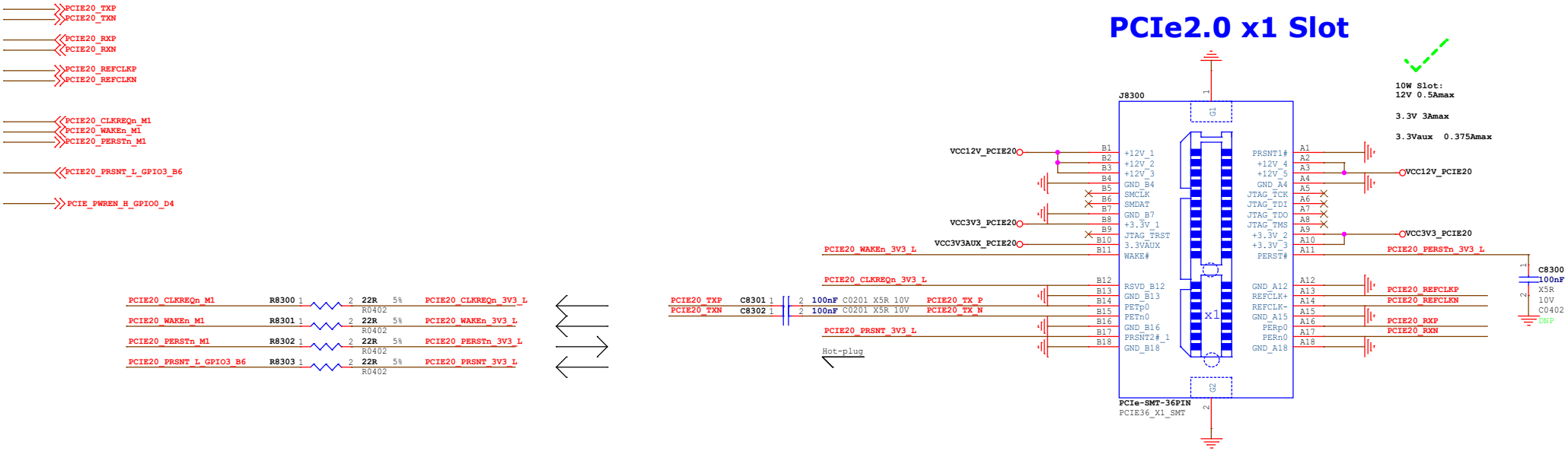

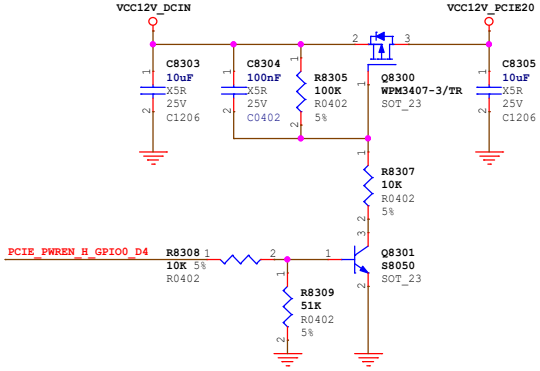

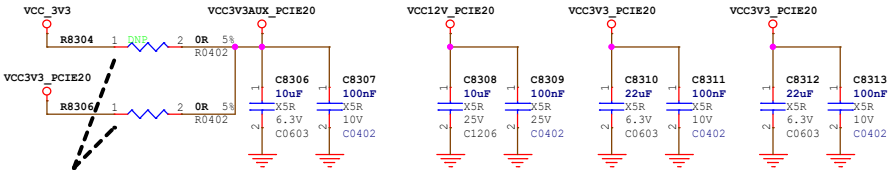

Note:

According to the actual choice of mounted
Cannot be mounted at the same time

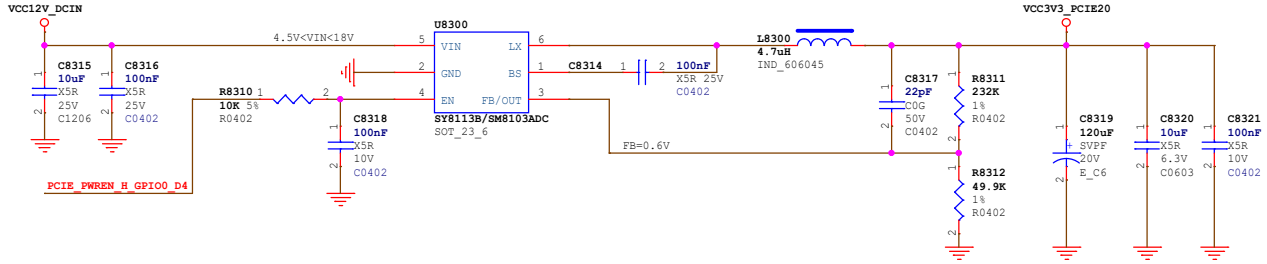

Rockchip 瑞芯微电子	Rockchip Electronics Co., Ltd				
Project:	RK3568_AIoT_REF_SCH				
File:	83.PCIE-PCIE2.0_1x1Lane_RC_36P				
Date:	Tuesday, September 26, 2023			Rev:	V2.0
Designed by:	Zhangdz	Reviewed by:	Default	Sheet:	61 of 72

Rockchip Confidential

PCIe3.0 x 2Lanes (X 4Slot)

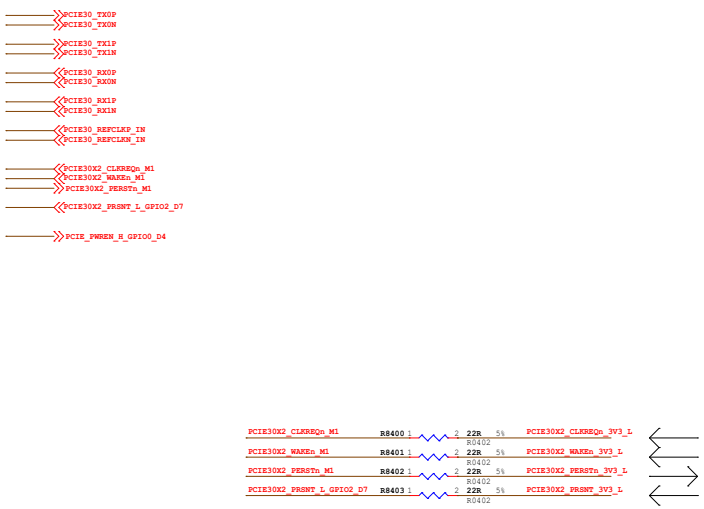

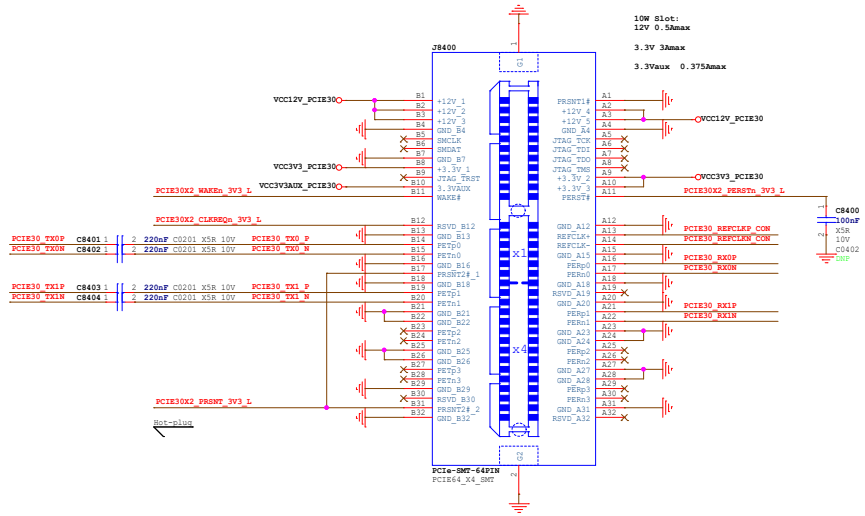

Note:
According to the actual choice of mounted
Cannot be mounted at the same time

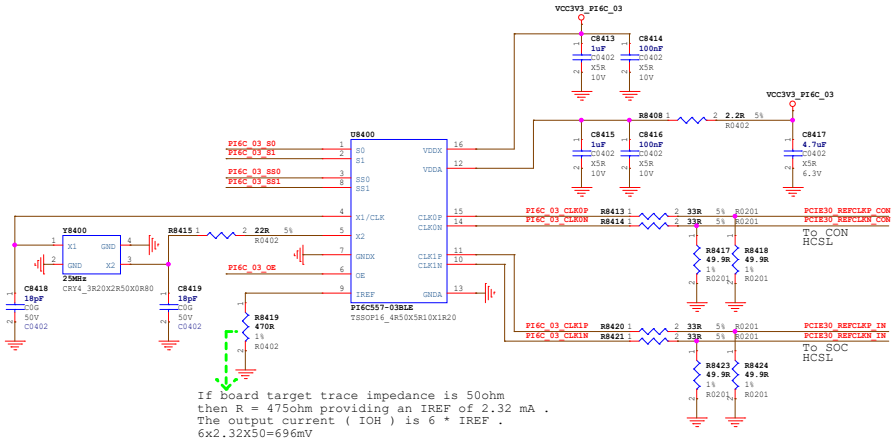

If board target trace impedance is 50ohm
then R = 475ohm providing an IREF of 2.32 mA .
The output current (IOH) is 6 * IREF .
6x2.32X50=696mV

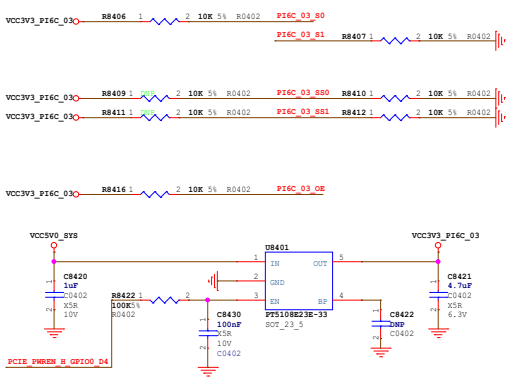

PI6C_S1	PI6C_S0	Out Freq
0	1	100MHz

PI6C_SS1	PI6C_SS0	Spread %
0	0	No Spread
0	1	-0.5
1	0	-1.0
1	1	No Spread

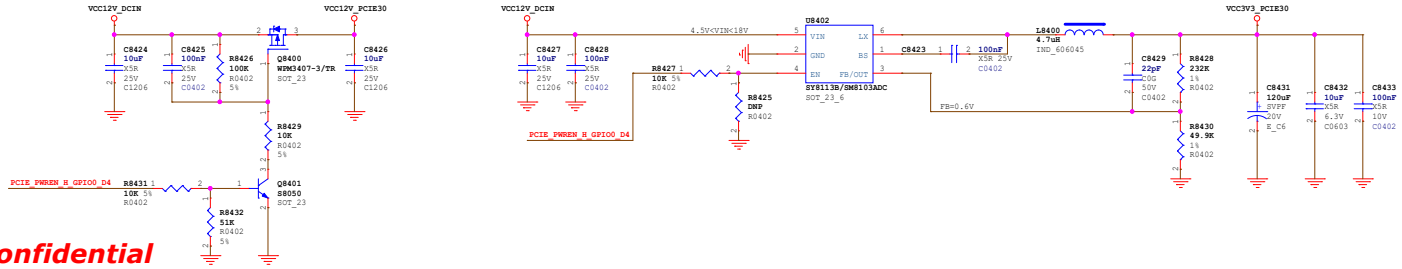

Rockchip Confidential

Rockchip 瑞芯微电子	Rockchip Electronics Co., Ltd		
Project:	RK3568_AIoT_REF_SCH		
File:	84.PCIE-PCIE3.0_1x2Lanes_RC_64P		
Date:	Tuesday, September 26, 2023	Rev:	V2.0
Designed by: Zhangtz	Reviewed by: Default	Sheet:	62 of 72

PCIe3.0 x1 Slot

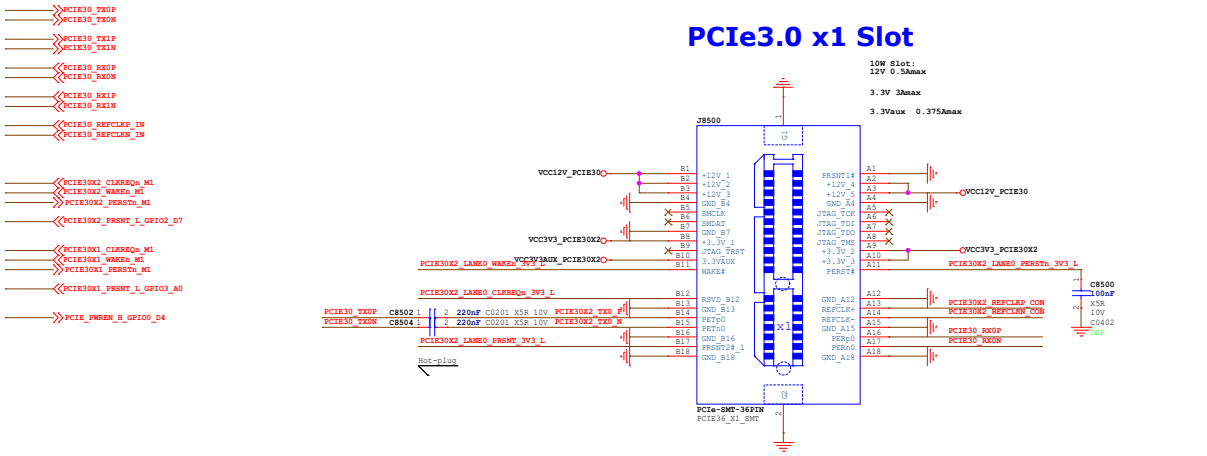

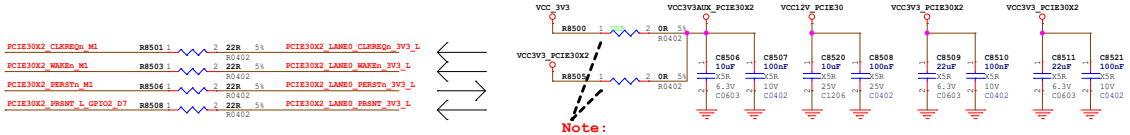

Note:

According to the actual choice of mounted
Cannot be mounted at the same time

PCIe3.0 x1 Slot

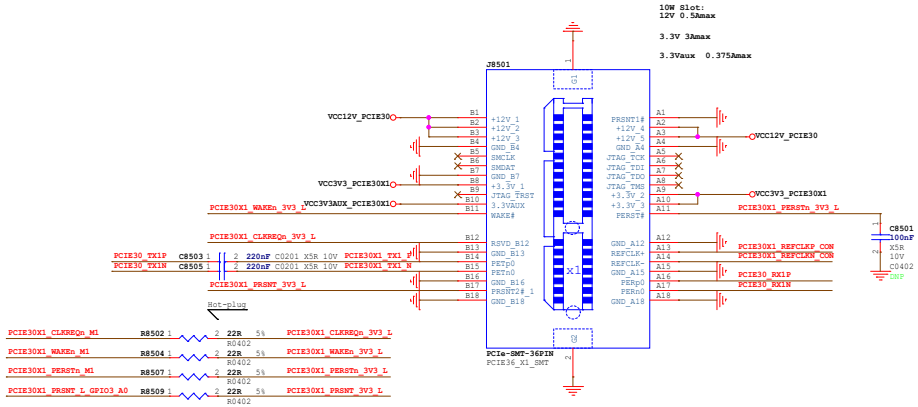

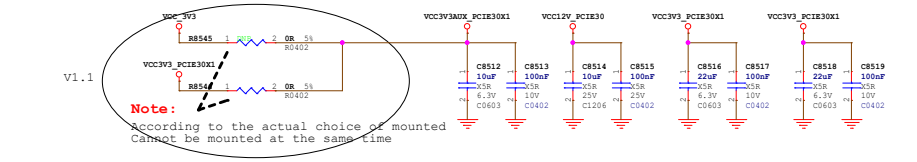

V1.1

Note:

According to the actual choice of mounted
Cannot be mounted at the same time

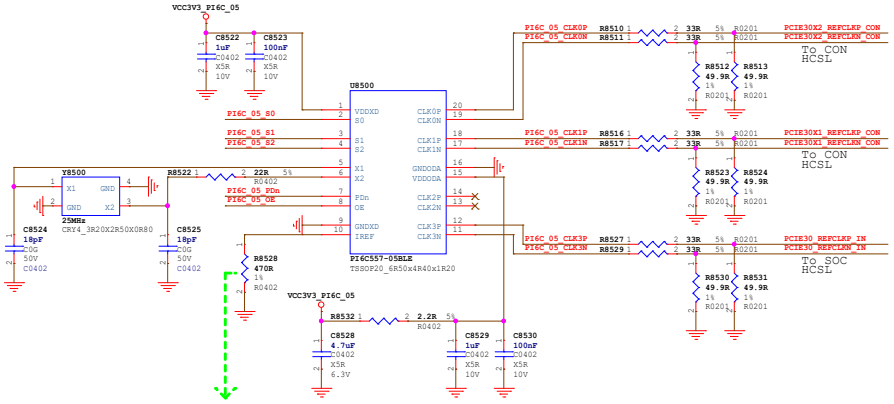

If board target trace impedance is 50ohm
then R = 475ohm providing an IREF of 2.32 mA . The output current (IOH) is 6 * IREF .
6x2.32X50=696mV

PI6C_S2	PI6C_S1	PI6C_S0	Spread %	Out Freq
0	0	0	-0.5	100MHz
0	0	1	-1.0	100MHz
0	1	0	-1.5	100MHz
0	1	1	No Spread	100MHz

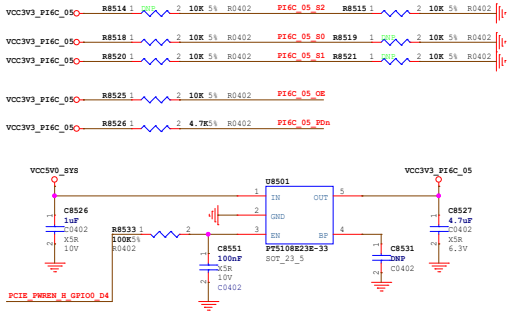

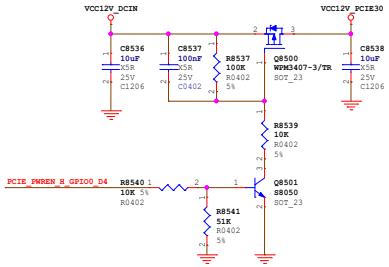

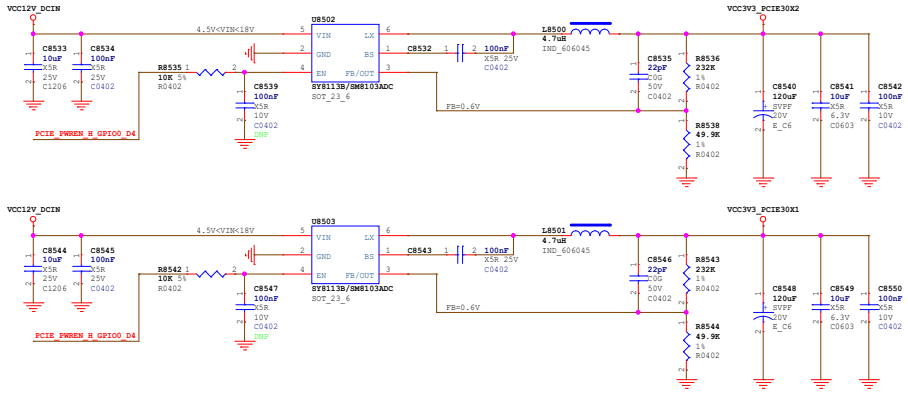

Rockchip Confidential

Rockchip 瑞芯微电子	Rockchip Electronics Co., Ltd		
Project:	RK3568_AIoT_REF_SCH		
File:	85.PCIE-PCIE3.0_2x1Lane_RC_32P		
Date:	Tuesday, September 26, 2023	Rev:	V2.0
Designed by: Zhangtz	Reviewed by: Default	Sheet:	63 of 72

MiniPCIe2.0 Slot_Support 4G module

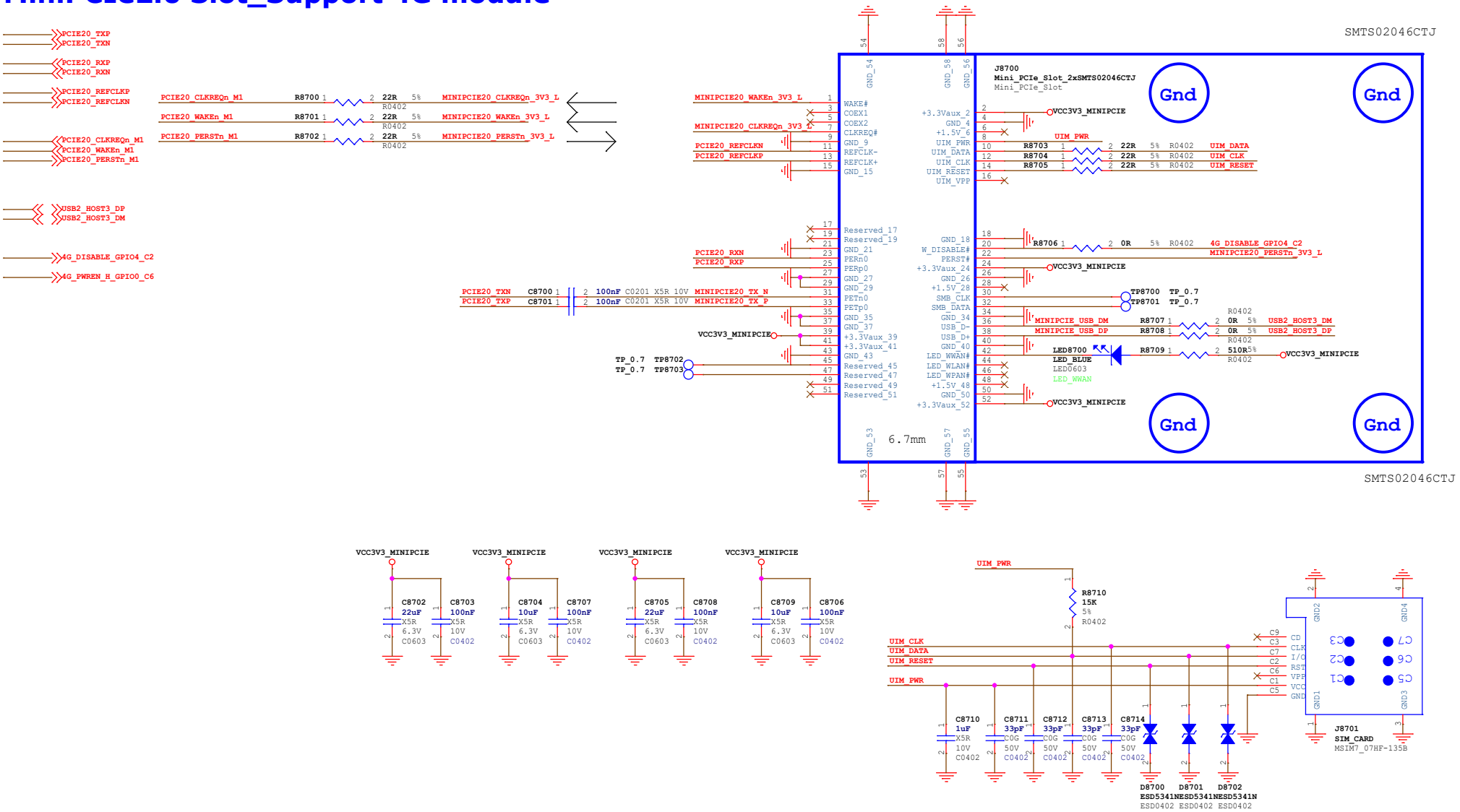

Rockchip Confidential

Rockchip 瑞芯微电子	Rockchip Electronics Co., Ltd				
Project:	RK3568_AIoT_REF_SCH				
File:	87.MiniPCIe2.0 Slot_With 4G Fun				
Date:	Tuesday, September 26, 2023			Rev:	V2.0
Designed by:	Zhangdz	Reviewed by:	Default	Sheet:	64 of 72

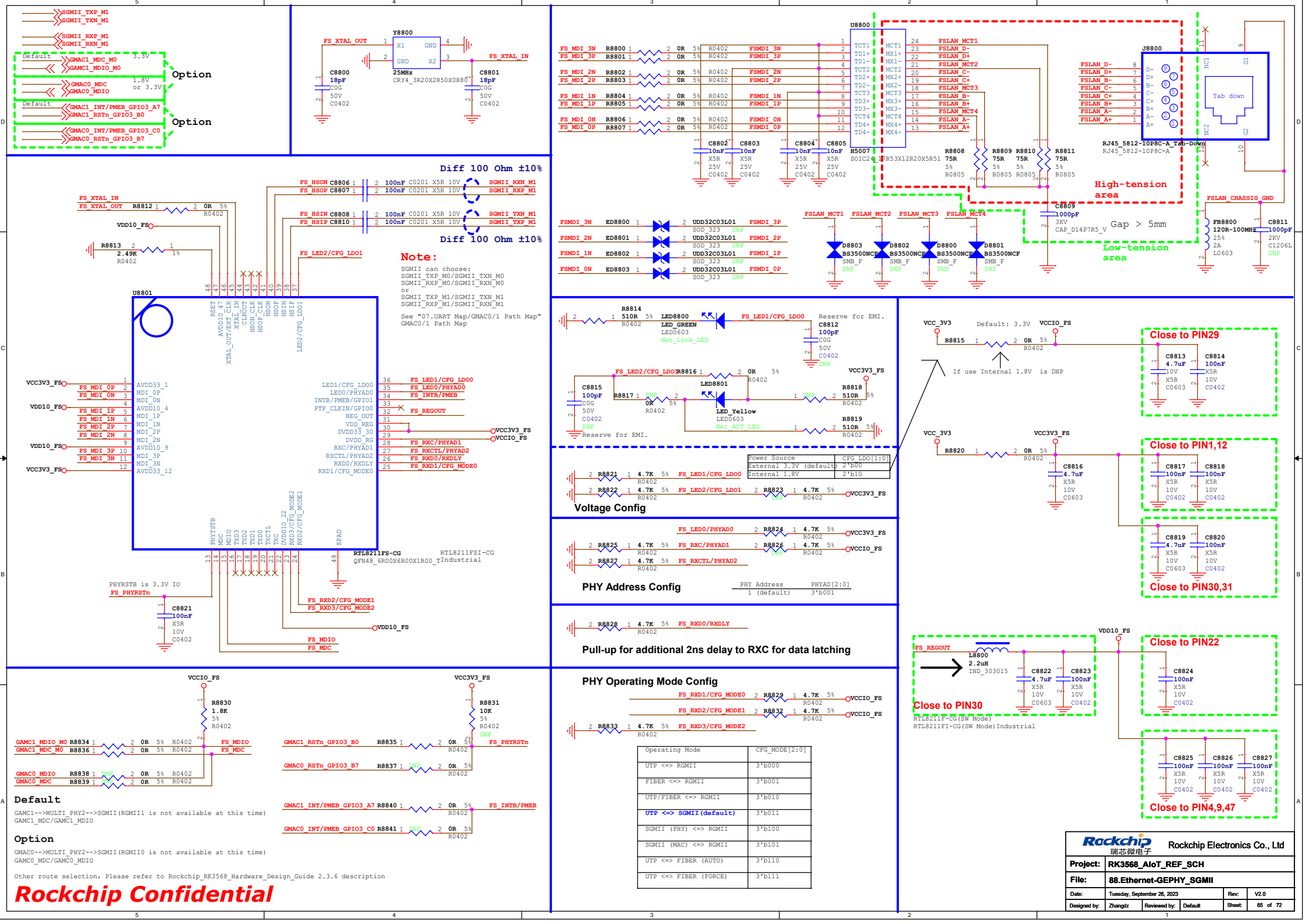
SGMII_TXP_M1
SGMII_TXN_M1
SGMII_RXP_M1
SGMII_RXN_M1
Default
GMAC1_MDC_M0
GAMC1_MDIO_M0
3.3V
Option
GMAC0_MDC
GMAC0_MDIO
1.8V or 3.3V
Default
GMAC1_INT/PMEB_GPIO3_A7
GMAC1_RSTn_GPIO3_B0
Option
GMAC0_INT/PMEB_GPIO3_C0
GMAC0_RSTn_GPIO3_B7
Y8800
FS_XTAL_OUT
FS_XTAL_IN
25MHz
CRY4_3R20X2R50X0R80
C8800 18pF C0G 50V C0402
C8801 18pF C0G 50V C0402
Diff 100 Ohm ±10%
FS_HSON C8806 100nF C0201 X5R 10V
FS_HSOP C8807 100nF C0201 X5R 10V
SGMII_RXN_M1
SGMII_RXP_M1
FS_HSIN C8808 100nF C0201 X5R 10V
FS_HSIP C8810 100nF C0201 X5R 10V
SGMII_TXN_M1
SGMII_TXP_M1
Diff 100 Ohm ±10%
FS_XTAL_IN
FS_XTAL_OUT R8812 0R R0402
VDD10_FS
R8813 2.49K R0402
FS_LED2/CFG_LDO1
Note:
SGMII can choose:
SGMII_TXP_M0/SGMII_TXN_M0
SGMII_RXP_M0/SGMII_RXN_M0
or
SGMII_TXP_M1/SGMII_TXN_M1
SGMII_RXP_M1/SGMII_RXN_M1
See "07.UART Map/GMAC0/1 Path Map"
GMAC0/1 Path Map
U8801
VCC3V3_FS
FS_MDI_0P
FS_MDI_0N
VDD10_FS
FS_MDI_1P
FS_MDI_1N
FS_MDI_2P
FS_MDI_2N
VDD10_FS
FS_MDI_3P
FS_MDI_3N
VCC3V3_FS
AVDD33_1
MDI_0P
MDI_0N
AVDD10_4
MDI_1P
MDI_1N
MDI_2P
MDI_2N
AVDD10_9
MDI_3P
MDI_3N
AVDD33_12
LED1/CFG_LDO0
LED0/PHYAD0
INTB/PMEB/GPIO1
PTP_CLKIN/GPIO0
REG_OUT
VDD_REG
DVDD33_30
DVDD_RG
RXC/PHYAD1
RXCTL/PHYAD2
RXD0/RXDLY
RXD1/CFG_MODE0
FS_LED1/CFG_LDO0
FS_LED0/PHYAD0
FS_INTB/PMEB
FS_REGOUT
VCC3V3_FS
VCCIO_FS
FS_RXC/PHYAD1
FS_RXCTL/PHYAD2
FS_RXD0/RXDLY
FS_RXD1/CFG_MODE0
PHYRSTB
MDC
MDIO
RXD3
TXD3
TXD1
TXD0
TXCTL
TXC
DVDD10_22
RXD3/CFG_MODE2
RXD2/CFG_MODE1
EPAD
RTL8211FS-CG
QFN48_6R00X6R00X1R00_T
RTL8211FSI-CG
Industrial
PHYRSTB is 3.3V IO
FS_PHYRSTn
C8821 100nF X5R 10V C0402
FS_RXD2/CFG_MODE1
FS_RXD3/CFG_MODE2
VDD10_FS
FS_MDIO
FS_MDC
U8800
FS_MDI_3N R8800 0R R0402 FSMDI_3N
FS_MDI_3P R8801 0R R0402 FSMDI_3P
FS_MDI_2N R8802 0R R0402 FSMDI_2N
FS_MDI_2P R8803 0R R0402 FSMDI_2P
FS_MDI_1N R8804 0R R0402 FSMDI_1N
FS_MDI_1P R8805 0R R0402 FSMDI_1P
FS_MDI_0N R8806 0R R0402 FSMDI_0N
FS_MDI_0P R8807 0R R0402 FSMDI_0P
C8802 10nF X5R 25V C0402
C8803 10nF X5R 25V C0402
C8804 10nF X5R 25V C0402
C8805 10nF X5R 25V C0402
H5007
SOIC24_17R53X12R20X5R51
FSLAN_MCT1
FSLAN_D-
FSLAN_D+
FSLAN_MCT2
FSLAN_C-
FSLAN_C+
FSLAN_MCT3
FSLAN_B-
FSLAN_B+
FSLAN_MCT4
FSLAN_A-
FSLAN_A+
R8808 75R 5% R0805
R8809 75R 5% R0805
R8810 75R 5% R0805
R8811 75R 5% R0805
High-tension area
J8800
Tab down
RJ45_5812-10P8C-A_Tab-Down
RJ45_5812-10P8C-A
FSLAN_CHASSIS_GND
FB8800 120R-100MHz 25% 2A L0603
C8811 1000pF 2KV C1206L DNP
C8809 1000pF 3KV CAP_D14P7R5_V
Gap > 5mm
Low-tension area
FSMDI_3N ED8800 UDD32C03L01 SOD_323 DNP FSMDI_3P
FSMDI_2N ED8801 UDD32C03L01 SOD_323 DNP FSMDI_2P
FSMDI_1N ED8802 UDD32C03L01 SOD_323 DNP FSMDI_1P
FSMDI_0N ED8803 UDD32C03L01 SOD_323 DNP FSMDI_0P
D8803 BS3500NCF SMB_F DNP
D8802 BS3500NCF SMB_F DNP
D8800 BS3500NCF SMB_F DNP
D8801 BS3500NCF SMB_F DNP
R8814 510R R0402
LED8800 LED_GREEN LED0603 Net_Link_LED
FS_LED1/CFG_LDO0
Reserve for EMI.
C8812 100pF C0G 50V C0402 DNP
FS_LED2/CFG_LDO1 R8816 0R R0402
VCC3V3_FS
C8815 100pF C0G 50V C0402 DNP
R8817 0R R0402
LED8801 LED_Yellow LED0603 Net_ACT_LED
R8818 510R R0402
R8819 510R R0402
Reserve for EMI.
R8821 4.7K R0402 FS_LED1/CFG_LDO0
R8822 4.7K R0402 FS_LED2/CFG_LDO1
R8823 4.7K R0402 VCC3V3_FS
Power Source | CFG_LDO[1:0]
External 3.3V (default) | 2'b00
Internal 1.8V | 2'b10
Voltage Config
R8824 4.7K R0402 FS_LED0/PHYAD0 VCC3V3_FS
R8825 4.7K R0402 FS_RXC/PHYAD1 VCCIO_FS
R8826 4.7K R0402
R8827 4.7K R0402 FS_RXCTL/PHYAD2
PHY Address Config
PHY Address | PHYAD[2:0]
1 (default) | 3'b001
R8828 4.7K R0402 FS_RXD0/RXDLY
Pull-up for additional 2ns delay to RXC for data latching
VCC_3V3
Default: 3.3V
VCCIO_FS
R8815 0R R0402
If use Internal 1.8V is DNP
Close to PIN29
C8813 4.7uF 10V X5R C0603
C8814 100nF X5R 10V C0402
VCC_3V3
R8820 0R R0402
VCC3V3_FS
C8816 4.7uF X5R 10V C0603
Close to PIN1,12
C8817 100nF X5R 10V C0402
C8818 100nF X5R 10V C0402
C8819 4.7uF X5R 10V C0603
C8820 100nF X5R 10V C0402
Close to PIN30,31
VDD10_FS
FS_REGOUT
L8800 2.2uH IND_303015
C8822 4.7uF X5R 10V C0603
C8823 100nF X5R 10V C0402
Close to PIN30
RTL8211FI-CG(SW Mode)Industrial
Close to PIN22
C8824 100nF X5R 10V C0402
C8825 100nF X5R 10V C0402
C8826 100nF X5R 10V C0402
C8827 100nF X5R 10V C0402
Close to PIN4,9,47
VCCIO_FS
R8830 1.8K 5% R0402
VCC3V3_FS
R8831 10K 5% R0402 DNP
GMAC1_MDIO_M0 R8834 0R R0402
GMAC1_MDC_M0 R8836 0R R0402
FS_MDIO
FS_MDC
GMAC0_MDIO R8838 0R R0402
GMAC0_MDC R8839 0R R0402
GMAC1_RSTn_GPIO3_B0 R8835 0R R0402
FS_PHYRSTn
GMAC0_RSTn_GPIO3_B7 R8837 0R R0402
Default
GAMC1-->MULTI_PHY2-->SGMII(RGMII1 is not available at this time)
GAMC1_MDC/GAMC1_MDIO
Option
GMAC0-->MULTI_PHY2-->SGMII(RGMII0 is not available at this time)
GAMC0_MDC/GAMC0_MDIO
GMAC1_INT/PMEB_GPIO3_A7 R8840 0R R0402
FS_INTB/PMEB
GMAC0_INT/PMEB_GPIO3_C0 R8841 0R R0402
Other route selection, Please refer to Rockchip_RK3568_Hardware_Design_Guide 2.3.6 description
Rockchip Confidential
PHY Operating Mode Config
FS_RXD1/CFG_MODE0 R8829 4.7K R0402 VCCIO_FS
FS_RXD2/CFG_MODE1 R8832 4.7K R0402 VCCIO_FS
R8833 4.7K R0402 FS_RXD3/CFG_MODE2
Operating Mode | CFG_MODE[2:0]
UTP <=> RGMII | 3'b000
FIBER <=> RGMII | 3'b001
UTP/FIBER <=> RGMII | 3'b010
UTP <=> SGMII(default) | 3'b011
SGMII (PHY) <=> RGMII | 3'b100
SGMII (MAC) <=> RGMII | 3'b101
UTP <=> FIBER (AUTO) | 3'b110
UTP <=> FIBER (FORCE) | 3'b111
Rockchip 瑞芯微电子
Rockchip Electronics Co., Ltd
Project: RK3568_AIoT_REF_SCH
File: 88.Ethernet-GEPHY_SGMII
Date: Tuesday, September 26, 2023
Rev: V2.0
Designed by: Zhangdz
Reviewed by: Default
Sheet: 65 of 72

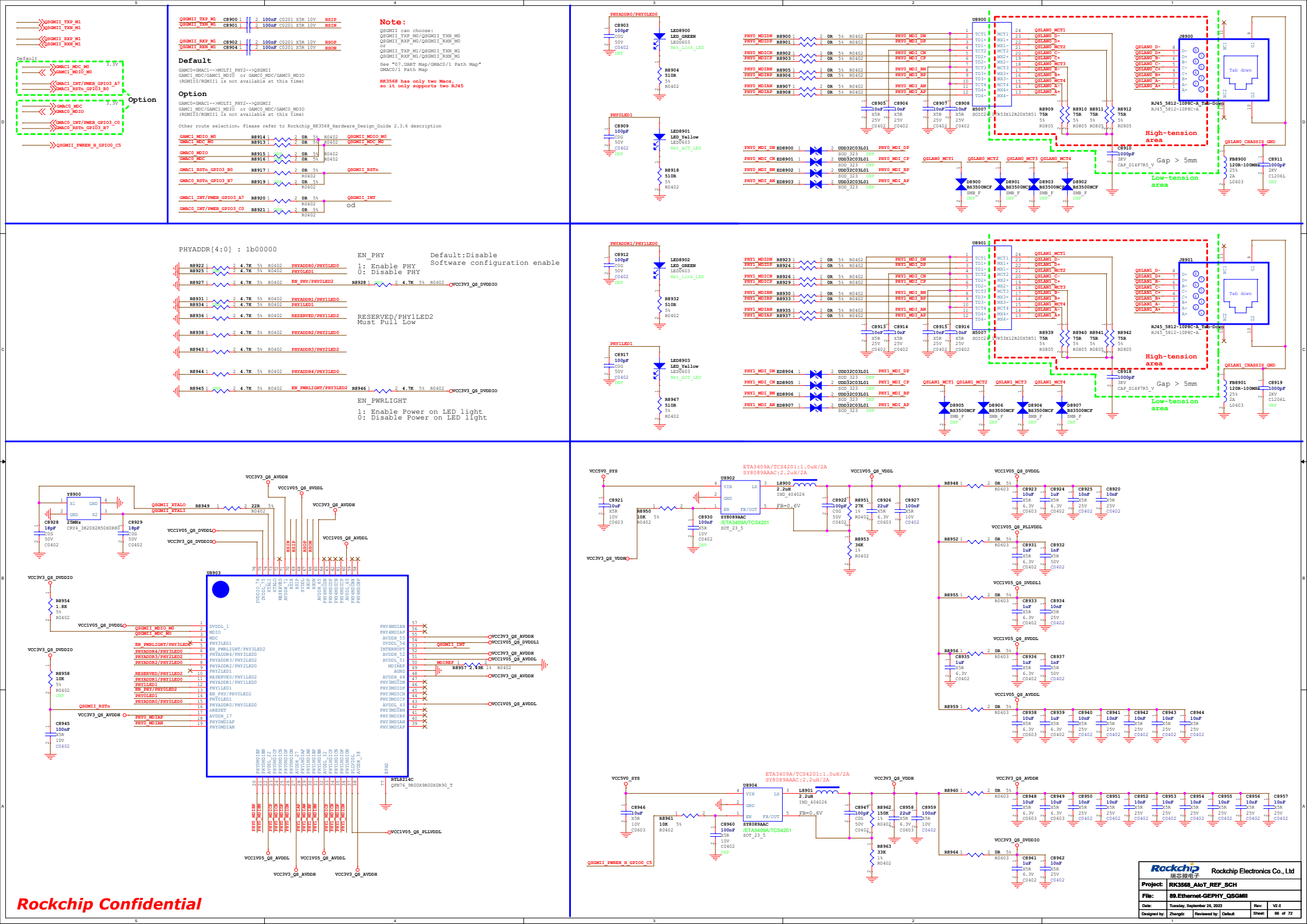
QSGMII_TXP_M1
QSGMII_TXN_M1
QSGMII_RXP_M1
QSGMII_RXN_M1
Default
GMAC1_MDC_M0
GMAC1_MDIO_M0
GMAC1_INT/PMEB_GPIO3_A7
GMAC1_RSTn_GPIO3_B0
Option
GMAC0_MDC
GMAC0_MDIO
GMAC0_INT/PMEB_GPIO3_C0
GMAC0_RSTn_GPIO3_B7
QSGMII_PWREN_H_GPIO0_C5
QSGMII_TXP_M1 C8900 100nF C0201 X5R 10V HSIP
QSGMII_TXN_M1 C8901 100nF C0201 X5R 10V HSIN
QSGMII_RXP_M1 C8902 100nF C0201 X5R 10V HSOP
QSGMII_RXN_M1 C8904 100nF C0201 X5R 10V HSON
Default
GAMC0+GMAC1-->MULTI_PHY2-->QSGMII
GAMC1_MDC/GAMC1_MDIO or GAMC0_MDC/GAMC0_MDIO
(RGMII0/RGMII1 Is not available at this time)
Option
GAMC0+GMAC1-->MULTI_PHY2-->QSGMII
GAMC1_MDC/GAMC1_MDIO or GAMC0_MDC/GAMC0_MDIO
(RGMII0/RGMII1 Is not available at this time)
Other route selection, Please refer to Rockchip_RK3568_Hardware_Design_Guide 2.3.6 description
GAMC1_MDIO_M0 R8914 0R R0402 QSGMII_MDIO_M0
GMAC1_MDC_M0 R8913 0R R0402 QSGMII_MDC_M0
GMAC0_MDIO R8915 0R R0402
GMAC0_MDC R8916 0R R0402
GMAC1_RSTn_GPIO3_B0 R8917 0R R0402 QSGMII_RSTn
GMAC0_RSTn_GPIO3_B7 R8919 0R R0402
GMAC1_INT/PMEB_GPIO3_A7 R8920 0R R0402 QSGMII_INT
GMAC0_INT/PMEB_GPIO3_C0 R8921 0R R0402
od
Note:
QSGMII can choose:
QSGMII_TXP_M0/QSGMII_TXN_M0
QSGMII_RXP_M0/QSGMII_RXN_M0
or
QSGMII_TXP_M1/QSGMII_TXN_M1
QSGMII_RXP_M1/QSGMII_RXN_M1
See "07.UART Map/GMAC0/1 Path Map"
GMAC0/1 Path Map
RK3568 has only two Macs,
so it only supports two RJ45
PHYADDR[4:0] : 1b00000
EN_PHY
1: Enable PHY
0: Disable PHY
Default:Disable
Software configuration enable
R8922 4.7K R0402 PHYADDR0/PHY0LED0
R8925 4.7K R0402 PHY0LED1
R8927 4.7K R0402 EN_PHY/PHY0LED2
R8928 4.7K R0402 VCC3V3_QS_DVDDIO
R8931 4.7K R0402 PHYADDR1/PHY1LED0
R8934 4.7K R0402 PHY1LED1
R8936 4.7K R0402 RESERVED/PHY1LED2
R8938 4.7K R0402 PHYADDR2/PHY2LED0
R8943 4.7K R0402 PHYADDR3/PHY2LED2
R8944 4.7K R0402 PHYADDR4/PHY3LED0
R8945 4.7K R0402 EN_PWRLIGHT/PHY3LED2
R8946 4.7K R0402 VCC3V3_QS_DVDDIO
RESERVED/PHY1LED2
Must Pull Low
EN_PWRLIGHT
1: Enable Power on LED light
0: Disable Power on LED light
PHYADDR0/PHY0LED0
C8903 100pF C0G 50V C0402 DNP
LED8900 LED_GREEN LED0603 Net_Link_LED
R8904 510R 5% R0402
PHY0LED1
C8909 100pF C0G 50V C0402 DNP
LED8901 LED_Yellow LED0603 Net_ACT_LED
R8918 510R 5% R0402
U8900
H5007 SOIC24 TR53X12R20X5R51
PHY0_MDIDN R8900 0R R0402 PHY0_MDI_DN
PHY0_MDIDP R8901 0R R0402 PHY0_MDI_DP
PHY0_MDICN R8902 0R R0402 PHY0_MDI_CN
PHY0_MDICP R8903 0R R0402 PHY0_MDI_CP
PHY0_MDIBN R8905 0R R0402 PHY0_MDI_BN
PHY0_MDIBP R8906 0R R0402 PHY0_MDI_BP
PHY0_MDIAN R8907 0R R0402 PHY0_MDI_AN
PHY0_MDIAP R8908 0R R0402 PHY0_MDI_AP
C8905 10nF 25V X5R C0402
C8906 10nF 25V X5R C0402
C8907 10nF 25V X5R C0402
C8908 10nF 25V X5R C0402
R8909 75R 5% R0805
R8910 75R 5% R0805
R8911 75R 5% R0805
R8912 75R 5% R0805
High-tension area
C8910 1000pF 3KV CAP_D14P7R5_V
Gap > 5mm
Low-tension area
J8900
RJ45_5812-10P8C-A_Tab-Down
Tab down
QSLAN0_CHASSIS_GND
FB8900 120R-100MHz 25% 2A L0603
C8911 1000pF 2KV C1206L DNP
PHY0_MDI_DN ED8900 UDD32C03L01 SOD_323 DNP
PHY0_MDI_CN ED8901 UDD32C03L01 SOD_323 DNP
PHY0_MDI_BN ED8902 UDD32C03L01 SOD_323 DNP
PHY0_MDI_AN ED8903 UDD32C03L01 SOD_323 DNP
QSLAN0_MCT1 QSLAN0_MCT2 QSLAN0_MCT3 QSLAN0_MCT4
D8900 BS3500NCF SMB_F DNP
D8901 BS3500NCF SMB_F DNP
D8903 BS3500NCF SMB_F DNP
D8902 BS3500NCF SMB_F DNP
PHYADDR1/PHY1LED0
C8912 100pF C0G 50V C0402 DNP
LED8902 LED_GREEN LED0603 Net_Link_LED
R8932 510R 5% R0402
PHY1LED1
C8917 100pF C0G 50V C0402 DNP
LED8903 LED_Yellow LED0603 Net_ACT_LED
R8947 510R 5% R0402
U8901
H5007 SOIC24 TR53X12R20X5R51
PHY1_MDIDN R8923 0R R0402 PHY1_MDI_DN
PHY1_MDIDP R8924 0R R0402 PHY1_MDI_DP
PHY1_MDICN R8926 0R R0402 PHY1_MDI_CN
PHY1_MDICP R8929 0R R0402 PHY1_MDI_CP
PHY1_MDIBN R8930 0R R0402 PHY1_MDI_BN
PHY1_MDIBP R8933 0R R0402 PHY1_MDI_BP
PHY1_MDIAN R8935 0R R0402 PHY1_MDI_AN
PHY1_MDIAP R8937 0R R0402 PHY1_MDI_AP
C8913 10nF 25V X5R C0402
C8914 10nF 25V X5R C0402
C8915 10nF 25V X5R C0402
C8916 10nF 25V X5R C0402
R8939 75R 5% R0805
R8940 75R 5% R0805
R8941 75R 5% R0805
R8942 75R 5% R0805
High-tension area
C8918 1000pF 3KV CAP_D14P7R5_V
Gap > 5mm
Low-tension area
J8901
RJ45_5812-10P8C-A_Tab-Down
Tab down
QSLAN1_CHASSIS_GND
FB8901 120R-100MHz 25% 2A L0603
C8919 1000pF 2KV C1206L DNP
PHY1_MDI_DN ED8904 UDD32C03L01 SOD_323 DNP
PHY1_MDI_CN ED8905 UDD32C03L01 SOD_323 DNP
PHY1_MDI_BN ED8906 UDD32C03L01 SOD_323 DNP
PHY1_MDI_AN ED8907 UDD32C03L01 SOD_323 DNP
QSLAN1_MCT1 QSLAN1_MCT2 QSLAN1_MCT3 QSLAN1_MCT4
D8905 BS3500NCF SMB_F DNP
D8906 BS3500NCF SMB_F DNP
D8904 BS3500NCF SMB_F DNP
D8907 BS3500NCF SMB_F DNP
Y8900 25MHz CRT4_3R20X2R50X0R80
C8928 18pF C0G 50V C0402
C8929 18pF C0G 50V C0402
QSGMII_XTALO
QSGMII_XTALI
R8949 22R R0402
VCC3V3_QS_AVDDH
VCC1V05_QS_SVDDL
VCC1V05_QS_DVDDL
VCC3V3_QS_DVDDIO
VCC1V05_QS_AVDDL
U8903
RTL8214C QFN76_9R00X9R00X0R90_T
R8954 1.8K 5% R0402
R8958 10K 5% R0402 DNP
C8945 100nF X5R 10V C0402
QSGMII_RSTn
QSGMII_MDIO_M0
QSGMII_MDC_M0
EN_PWRLIGHT/PHY3LED2
PHYADDR4/PHY3LED0
PHYADDR3/PHY2LED2
PHYADDR2/PHY2LED0
RESERVED/PHY1LED2
PHYADDR1/PHY1LED0
PHY1LED1
EN_PHY/PHY0LED2
PHY0LED1
PHYADDR0/PHY0LED0
PHY0_MDIAP
PHY0_MDIAN
QSGMII_INT
MDIREF
R8957 2.49K 1% R0402
VCC1V05_QS_PLLVDDL
VCC3V3_QS_AVDDH
VCC1V05_QS_AVDDL
ETA3409A/TCS4201:1.0uH/2A
SY8089AAC:2.2uH/2A
U8902
SY8089AAC /ETA3409A/TCS4201 SOT_23_5
L8900 2.2uH IND_404026
FB=0.6V
VCC5V0_SYS
VCC3V3_QS_VDDH
VCC1V05_QS_VDDL
C8921 10uF X5R 10V C0603
R8950 10K 5% R0402
C8930 100nF X5R 10V C0402 DNP
C8922 100pF C0G 50V C0402
R8951 27K 1% R0402
C8926 22uF X5R 6.3V C0603
C8927 100nF X5R 10V C0402
R8953 36K 1% R0402
VCC1V05_QS_DVDDL
VCC1V05_QS_PLLVDDL
VCC1V05_QS_DVDDL1
VCC1V05_QS_SVDDL
VCC1V05_QS_AVDDL
R8948 0R R0603
R8952 0R R0603
R8955 0R R0603
R8956 0R R0603
R8959 0R R0603
C8923 10uF X5R C0603
C8924 1uF X5R 6.3V C0402
C8925 10uF X5R 25V C0402
C8920 10nF X5R 25V C0402
C8931 1uF X5R 6.3V C0402
C8932 1nF X5R 50V C0402
C8933 1uF X5R 6.3V C0402
C8934 10nF X5R 25V C0402
C8935 1uF X5R 6.3V C0402
C8936 1uF X5R 6.3V C0402
C8937 1nF X5R 50V C0402
C8938 10uF X5R 6.3V C0603
C8939 1uF X5R 6.3V C0402
C8940 10nF X5R 25V C0402
C8941 10nF X5R 25V C0402
C8942 10nF X5R 25V C0402
C8943 10nF X5R 25V C0402
C8944 10nF X5R 25V C0402
ETA3409A/TCS4201:1.0uH/2A
SY8089AAC:2.2uH/2A
U8904
SY8089AAC /ETA3409A/TCS4201 SOT_23_5
L8901 2.2uH IND_404026
FB=0.6V
VCC5V0_SYS
VCC3V3_QS_VDDH
VCC3V3_QS_AVDDH
VCC3V3_QS_DVDDIO
QSGMII_PWREN_H_GPIO0_C5
C8946 10uF X5R 10V C0603
R8961 10K 5% R0402
C8960 100nF X5R 10V C0402 DNP
C8947 100pF C0G 50V C0402
R8962 150K 1% R0402
C8958 22uF X5R 6.3V C0603
C8959 100nF X5R 10V C0402
R8963 33K 1% R0402
R8960 0R R0603
R8964 0R R0603
C8948 10uF X5R 6.3V C0603
C8949 10nF X5R 6.3V C0603
C8950 10nF X5R 25V C0402
C8951 10nF X5R 25V C0402
C8952 10nF X5R 25V C0402
C8953 10nF X5R 25V C0402
C8954 10nF X5R 25V C0402
C8955 10nF X5R 25V C0402
C8956 10nF X5R 25V C0402
C8957 10nF X5R 25V C0402
C8961 1uF X5R 6.3V C0402
C8962 10nF X5R 25V C0402
Rockchip Confidential
Rockchip 瑞芯微电子 Rockchip Electronics Co., Ltd
Project: RK3568_AIoT_REF_SCH
File: 89.Ethernet-GEPHY_QSGMII
Date: Tuesday, September 26, 2023
Rev: V2.0
Designed by: Zhangtz
Reviewed by: Default
Sheet: 66 of 72

IR Receiver

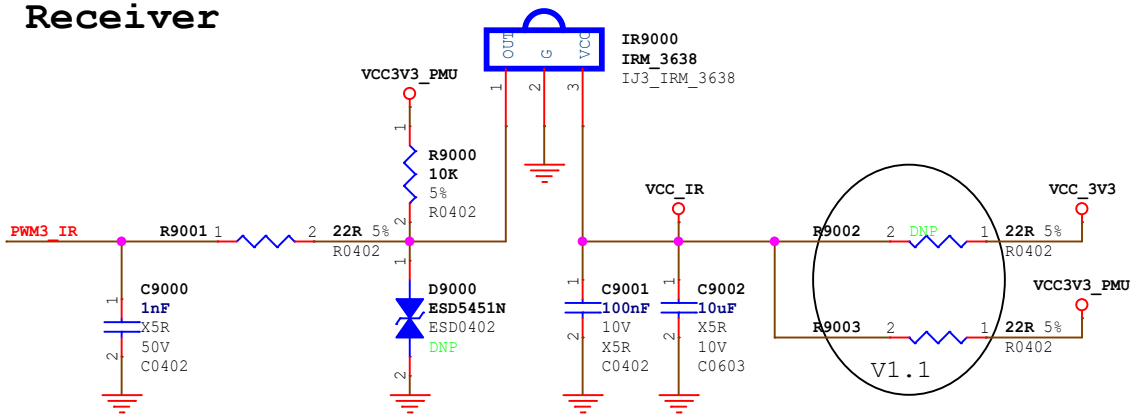

Rockchip Confidential

Rockchip 瑞芯微电子	Rockchip Electronics Co., Ltd				
Project:	RK3568_AIoT_REF_SCH				
File:	90.IR Receiver				
Date:	Tuesday, September 26, 2023			Rev:	V2.0
Designed by:	Zhangdz	Reviewed by:	Default	Sheet:	67 of 72

UART2_RX_M0_DEBUG
UART2_TX_M0_DEBUG

Debug UART2

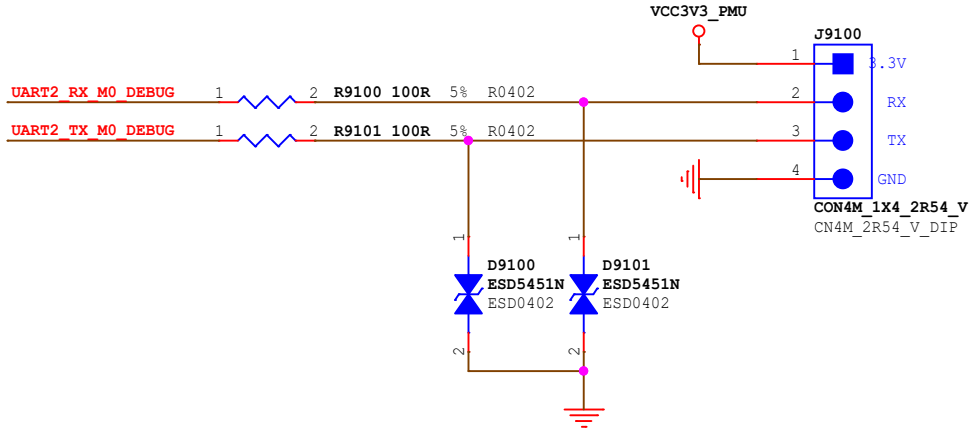

Rockchip Confidential

Rockchip 瑞芯微电子	Rockchip Electronics Co., Ltd				
Project:	RK3568_AIoT_REF_SCH				
File:	91.Debug UART				
Date:	Tuesday, September 26, 2023			Rev:	V2.0
Designed by:	Zhangdz	Reviewed by:	Default	Sheet:	68 of 72

Key Array

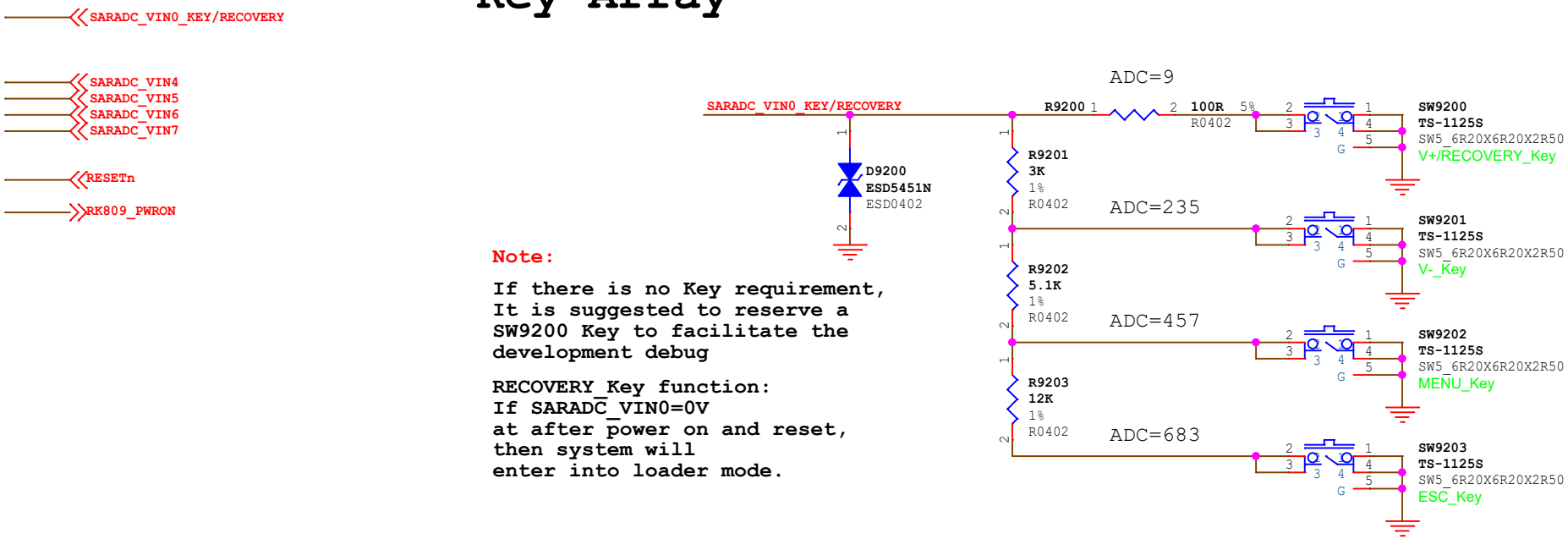

Note:

If there is no Key requirement,
It is suggested to reserve a
SW9200 Key to facilitate the
development debug

RECOVERY_Key function:
If SARADC_VIN0=0V
at after power on and reset,
then system will
enter into loader mode.

PowerOn/OFF_Key

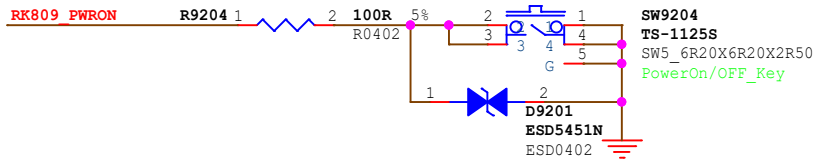

Reset_Key

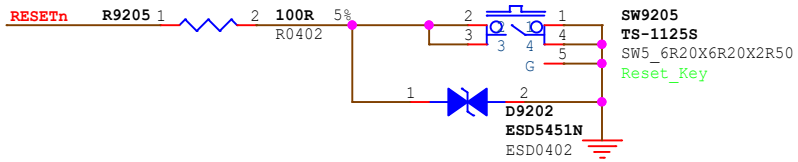

SARADC

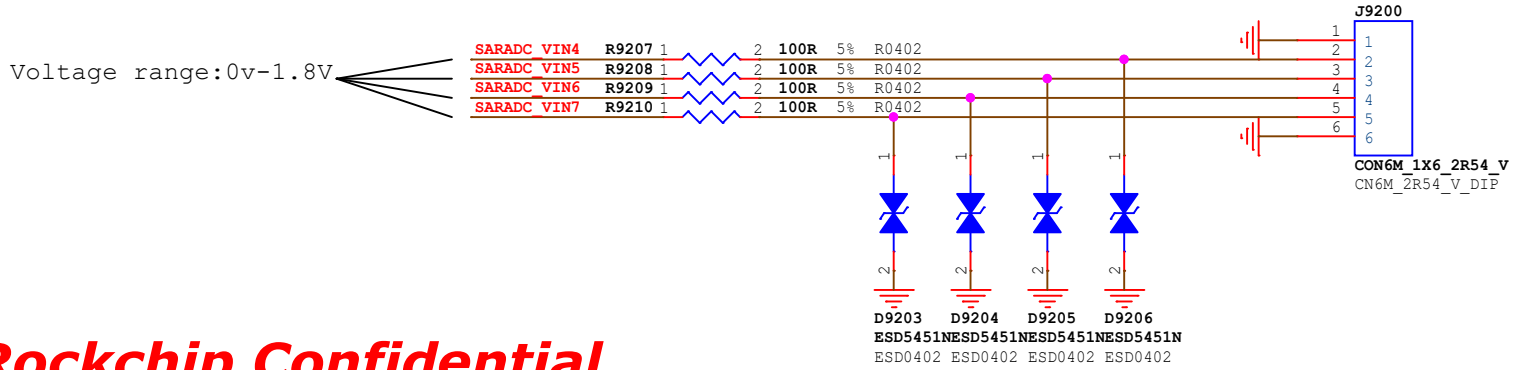

Rockchip Confidential

Rockchip 瑞芯微电子	Rockchip Electronics Co., Ltd				
Project:	RK3568_AIoT_REF_SCH				
File:	92.KEY Array/SARADC				
Date:	Tuesday, September 26, 2023			Rev:	V2.0
Designed by:	Zhangdz	Reviewed by:	Default	Sheet:	69 of 72

Working_LEDEN_H_GPIO0_B7

SARADC_VIN1_HW_ID

SARADC_VIN3_BOM_ID

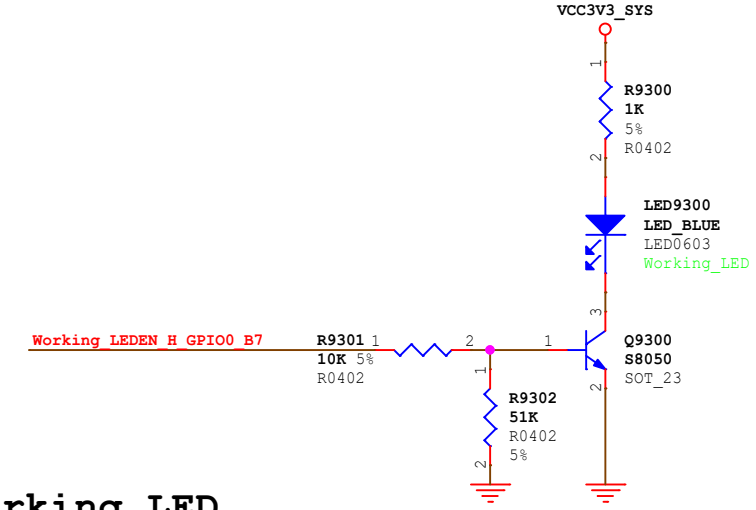

Working LED

HW_ID

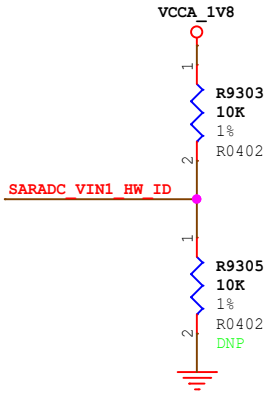

SARADC_VIN1	Up Resistance	Down Resistance
HW_ID0	10K	DNP
HW_ID1	10K	110K
HW_ID2	20K	100K
HW_ID3	33K	100K
HW_ID4	18K	36K
HW_ID5	36K	51K
HW_ID6	51K	51K
HW_ID7	51K	36K
HW_ID8	36K	18K
HW_ID9	100K	33K
HW_ID10	100K	20K
HW_ID11	110K	10K
HW_ID12	DNP	10K

BOM_ID

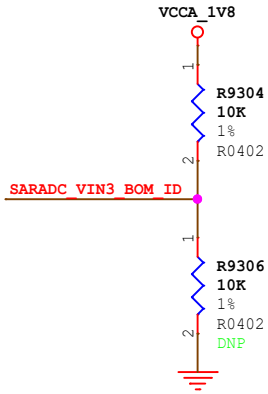

SARADC_VIN3	Up Resistance	Down Resistance
BOM_ID0	10K	DNP
BOM_ID1	10K	110K
BOM_ID2	20K	100K
BOM_ID3	33K	100K
BOM_ID4	18K	36K
BOM_ID5	36K	51K
BOM_ID6	51K	51K
BOM_ID7	51K	36K
BOM_ID8	36K	18K
BOM_ID9	100K	33K
BOM_ID10	100K	20K
BOM_ID11	110K	10K
BOM_ID12	DNP	10K

Rockchip Confidential

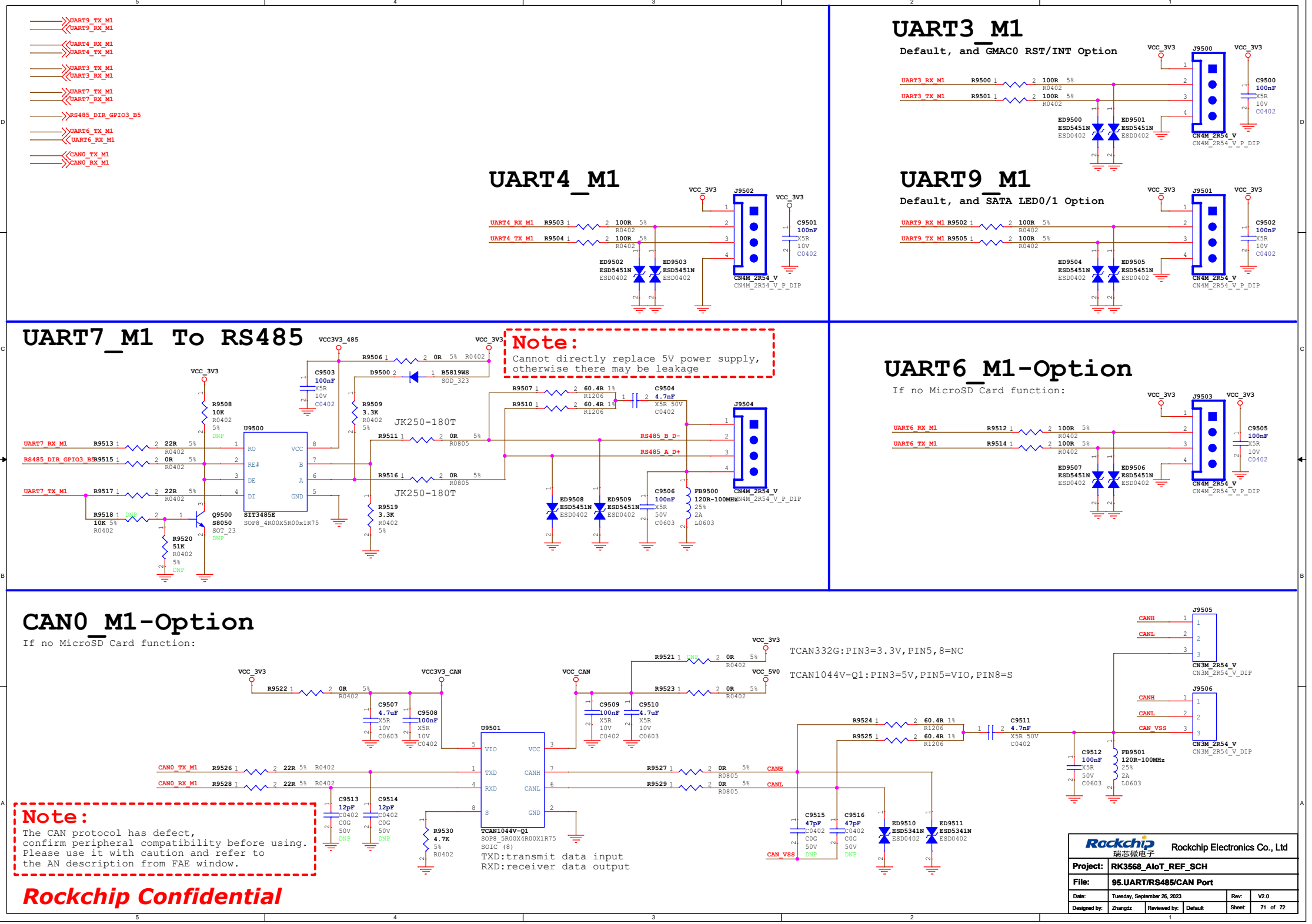
UART9_TX_M1
UART9_RX_M1
UART4_RX_M1
UART4_TX_M1
UART3_TX_M1
UART3_RX_M1
UART7_TX_M1
UART7_RX_M1
RS485_DIR_GPIO3_B5
UART6_TX_M1
UART6_RX_M1
CAN0_TX_M1
CAN0_RX_M1
UART3_M1
Default, and GMAC0 RST/INT Option
UART4_M1
UART9_M1
Default, and SATA LED0/1 Option
UART7_M1 To RS485
Note:
Cannot directly replace 5V power supply, otherwise there may be leakage
JK250-180T
UART6_M1-Option
If no MicroSD Card function:
CAN0_M1-Option
If no MicroSD Card function:
TCAN332G:PIN3=3.3V,PIN5,8=NC
TCAN1044V-Q1:PIN3=5V,PIN5=VIO,PIN8=S
TCAN1044V-Q1
TXD:transmit data input
RXD:receiver data output
Note:
The CAN protocol has defect, confirm peripheral compatibility before using. Please use it with caution and refer to the AN description from FAE window.
Rockchip Confidential
Rockchip Electronics Co., Ltd
Project: RK3568_AIoT_REF_SCH
File: 95.UART/RS485/CAN Port
Date: Tuesday, September 26, 2023
Rev: V2.0
Designed by: Zhangdz
Reviewed by: Default
Sheet: 71 of 72

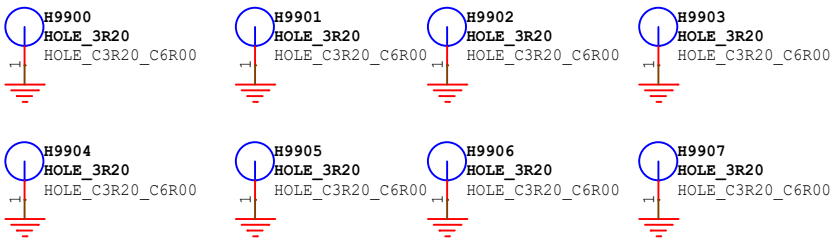

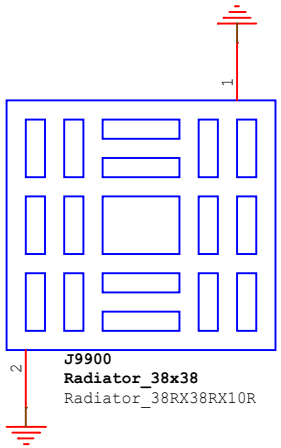

TOP Mark

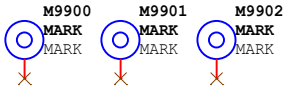

BOTTOM Mark

Rockchip Confidential

Rockchip 瑞芯微电子	Rockchip Electronics Co., Ltd				
Project:	RK3568_AIoT_REF_SCH				
File:	99.Mark/Hole/Heatsink				
Date:	Tuesday, September 26, 2023			Rev:	V2.0
Designed by:	Zhangdz	Reviewed by:	Default	Sheet:	72 of 72